SIMTEK

Tools for
highest
expectations

In case you need
higher cutting depths.

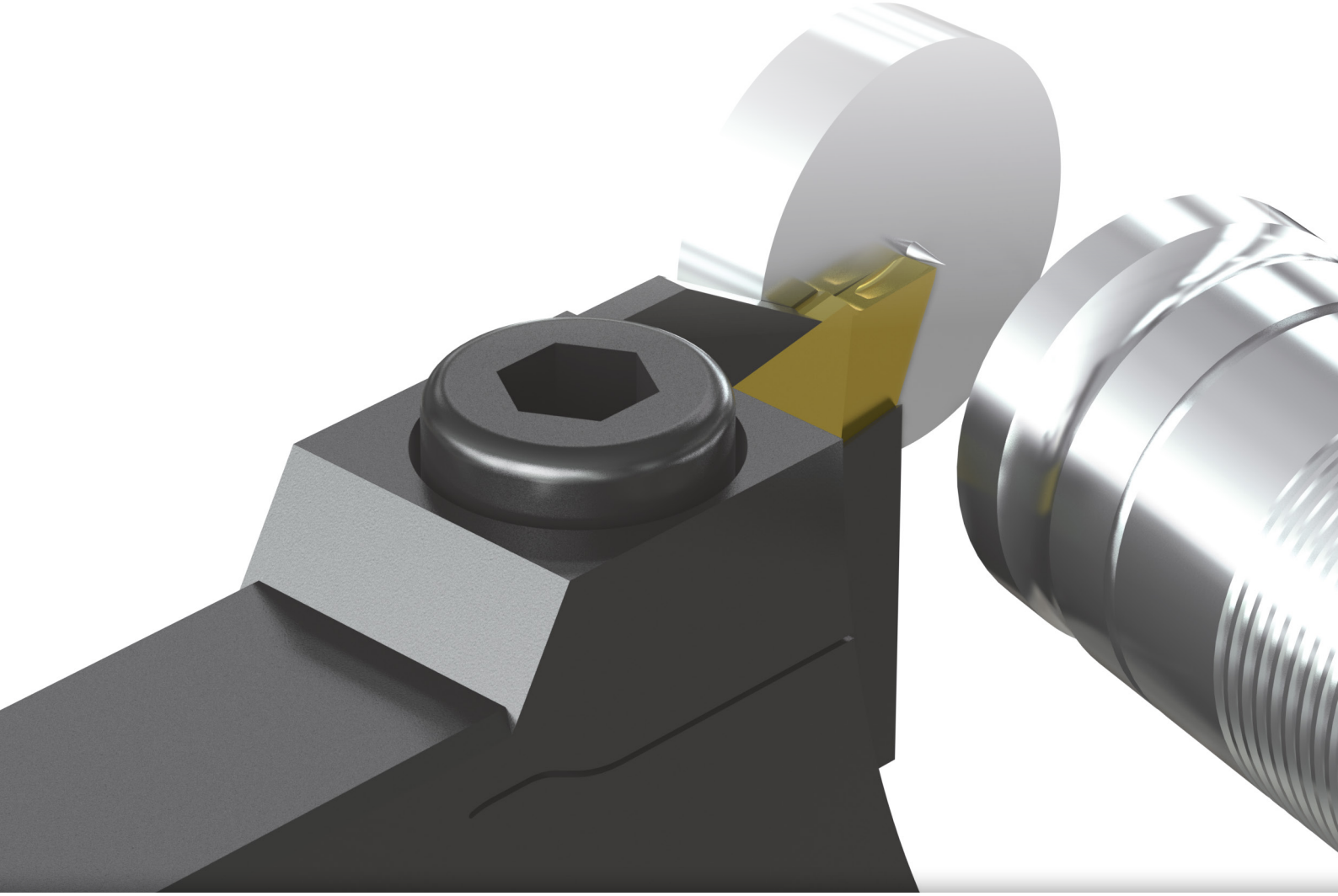

simturn GX

SIMTEK Turning Tools Type GX

Part Catalog
R20 US-Edition

Tools for
highest
expectations

Contact

SIMTEK USA Inc.
13 Fairfield Ave. Suite 104
US 07424-1257 Little Falls, NJ

fon +1 862 757 8130
fax +1 862 757 8134
mail usa@simtek.com
web www.simtek.com/usa

© 2020 SIMTEK Group. All rights reserved. Errors, omissions and changes excepted. Reprint of this catalog, complete or in extracts, only with our prior written permission. precium is a product of the SIMTEK Group and exclusively distributed through the global SIMTEK Distribution Network. SIMTEK, simturn, simmill, and simcut are registered trademarks in the US and several other countries. „QR Code“ is a registered trademark of DENSO WAVE INCORPORATED. This document has been prepared in English. In the event a translation exists and there is a discrepancy, this English original shall prevail.

The Tool System Overview

For higher cutting depths.

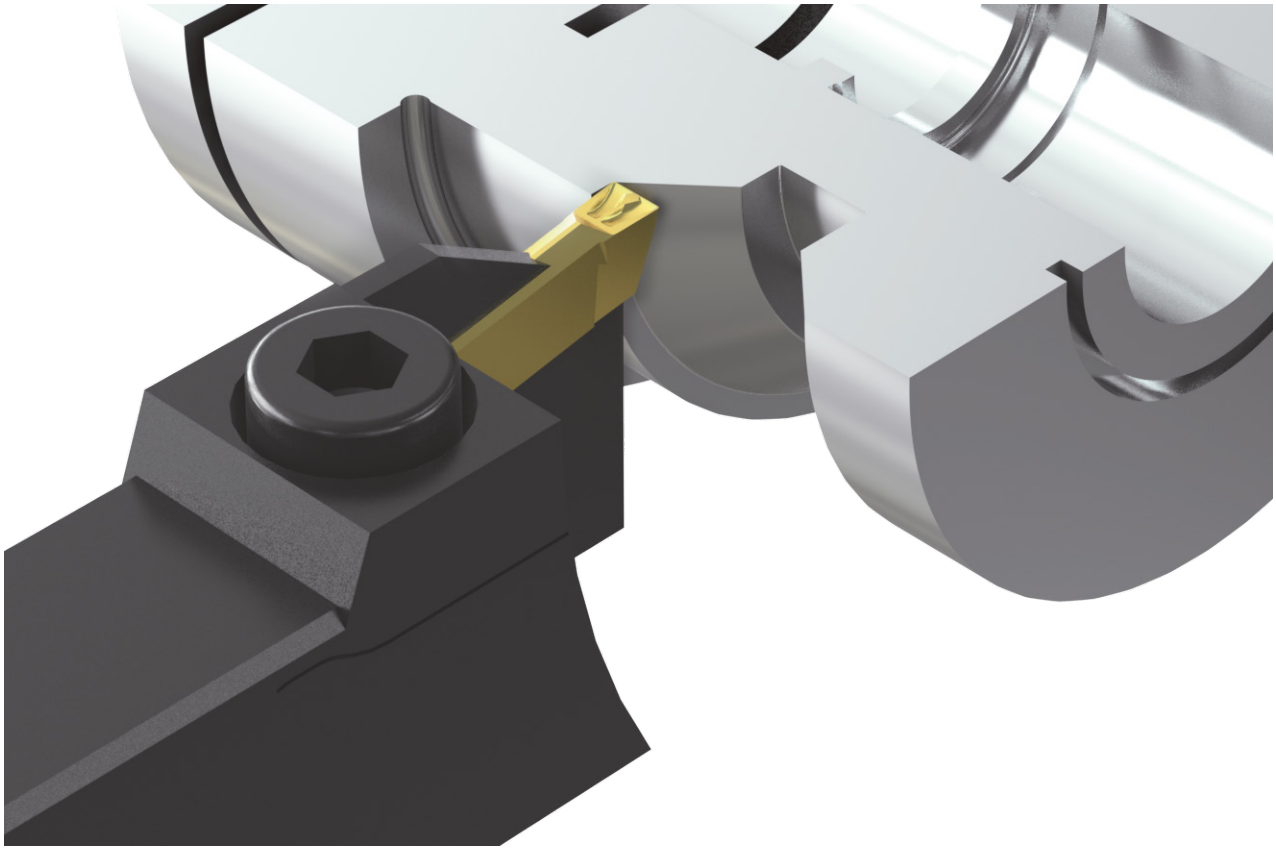

Tool system of double-edged indexable carbide cutting insert and strong toolholders for demanding applications.

Possible depths of cut up to 26,0 mm (1.024“) for external applications. Internal applications as of minimum bore diameter 38,0 mm (1.496“). Different ground and sintered cutting edge geometries available.

The System Details

Please read the general instructions for use on page 35

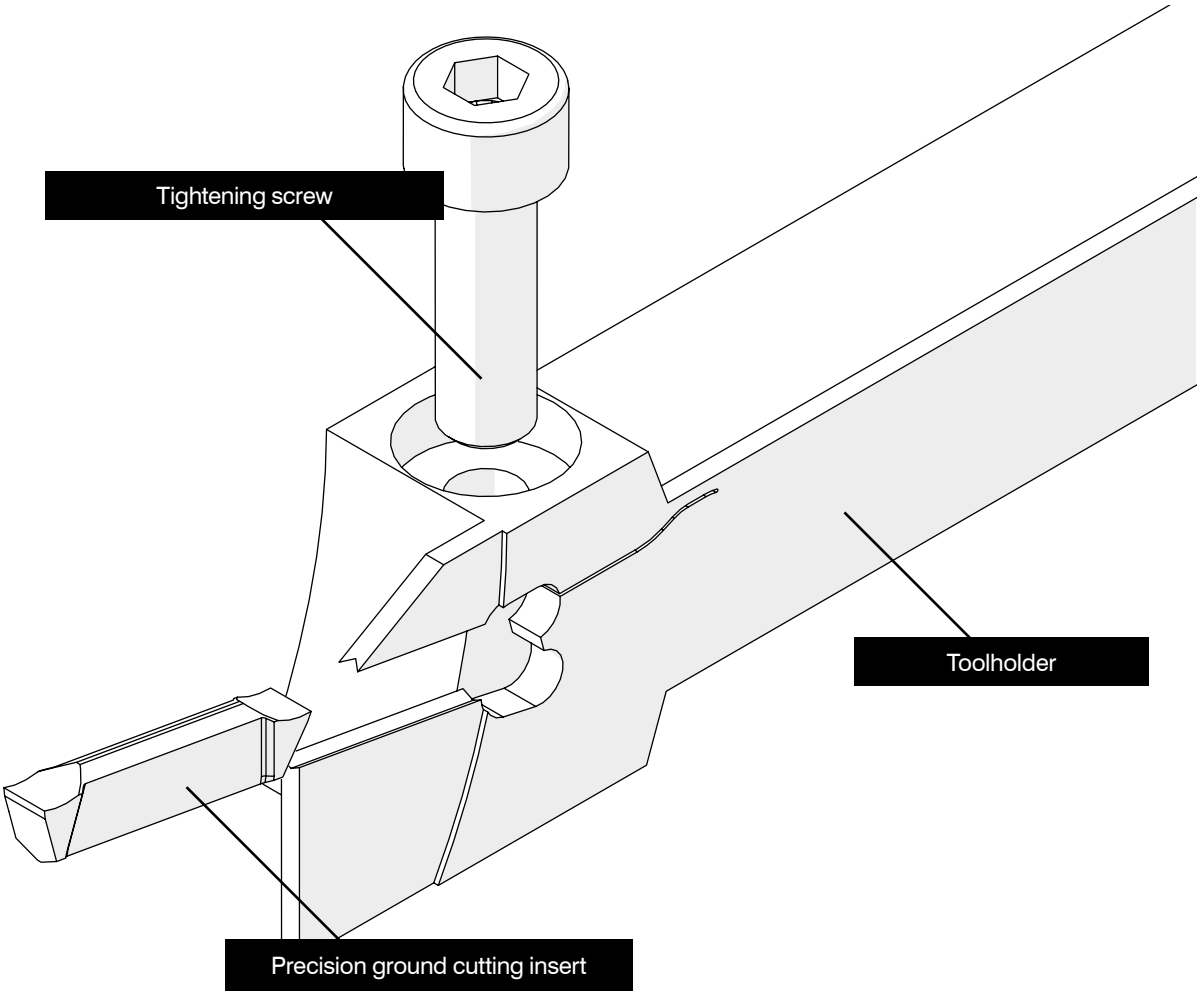

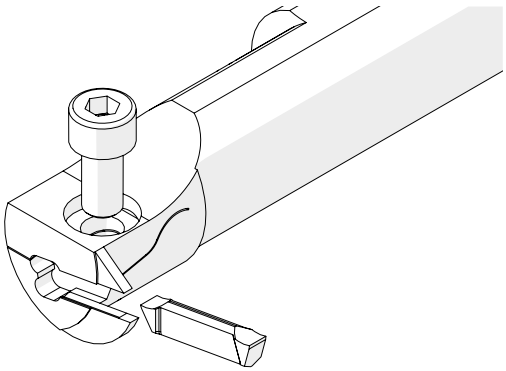

Available for internal and external applications

Internal
As of bore diameter 38,0 mm (1.496“).

External
Maximum cutting depth 26,0 mm (1.024“).

Standard Applications

As of Page
18

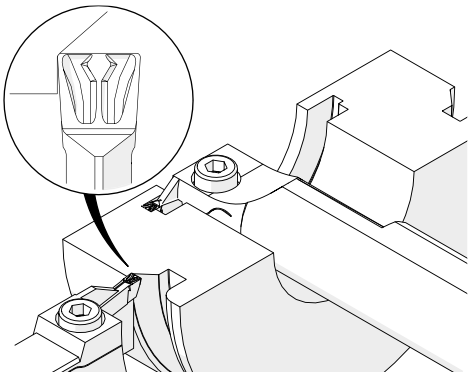

Grooving and Profiling

Page
22

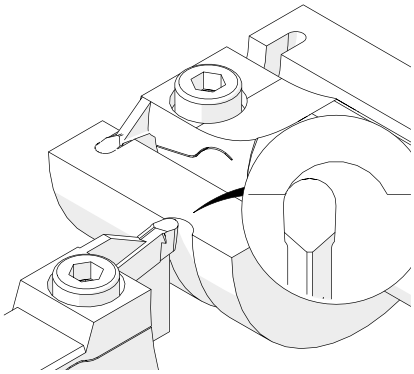

Grooving and Profiling, Full Radius

Page
23

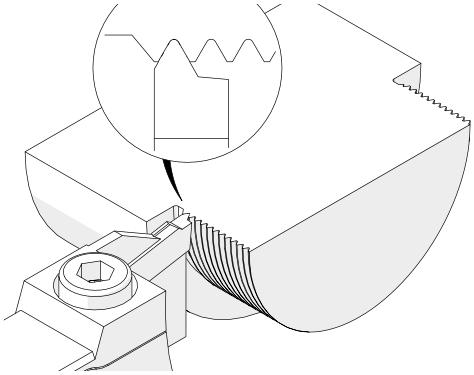

Threading: Metric ISO, external, Partial Profile

Page
24

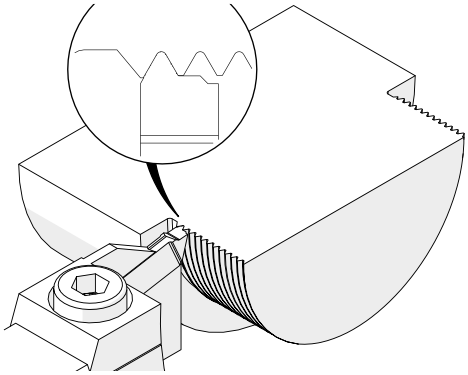

Threading: Metric ISO, external, Full Profile

Page
25

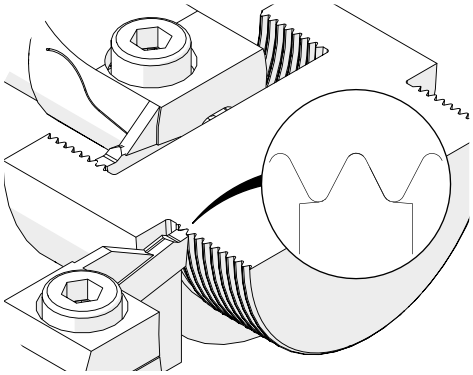

Threading: Whitworth, Full Profile

Page
27

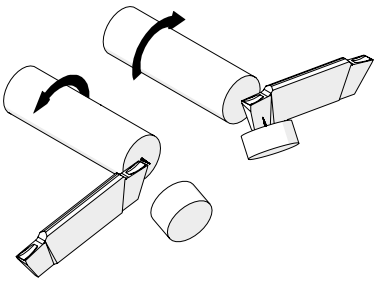

Parting off

Toolholder, External, Regular Cutting Depths

External grooving and turning. Well-balanced ratio of cutting depth and stability.

Tightening torque (screw)
12,0 Nm

TW ST | R | Legend 29

Scan QR-Code | Or Visit **www.simtek.info/cp/515**

This page contains inch tools! These tools are indicated by **inch** on the right hand side.

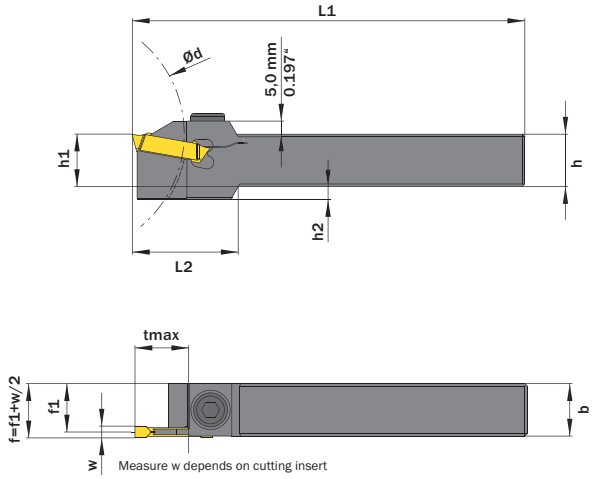

Drawing shows: G18.2020.03 R

tmax depends on workpiece diameter (Ød)	tmax for Shank up to 25,0mm / 0.984"	tmax forShank 32,0mm / 1.260"
up to Ø63,0 mm / up to Ø2.480"	20,0 mm / 0.787"	20,0 mm / 0.787"
up to Ø100,0 mm / up to Ø3.937"	20,0 mm / 0.787"	20,0 mm / 0.787"
up to Ø160,0 mm / up to Ø6.299"	18,6 mm / 0.732"	17,4 mm / 0.685"
up to Ø250,0 mm / up to Ø9.843"	17,1 mm / 0.673"	14,9 mm / 0.587"
up to Ø400,0 mm / up to Ø15.748"	16,1 mm / 0.634"	13,3 mm / 0.524"

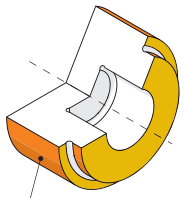

Mainly designed for these surfaces

Also possible depending on insert/fixation type

h mm/inch	b mm/inch	w ≥ mm	w ≤ mm	Part number	Webcode www.simtek.com/webcode				f1 mm/inch	h1 js14 mm/inch	h2 mm/inch	L1 mm/inch	L2 mm/inch	tmax mm/inch	Screw	Screw driver	Connectcode www.simtek.com/ccode	
▼ Connectcode = G29.02																		
0.625"	0.625"	2,0	2,9	**G18.0.625.02 R/L**	R	AAS0	L	AJ1G	0.586"	0.622"	0.354"	4.921"	1.575"	0.787"	G M8x25 SW6	SW6	G29.02	inch
0.750"	0.750"	2,0	2,9	**G18.0.750.02 R/L**	R	A3T9	L	A3T7	0.711"	0.750"	0.234"	4.921"	1.575"	0.787"	G M8x25 SW6	SW6	G29.02	inch
1.000"	1.000"	2,0	2,9	**G18.1.000.02 R/L**	R	AWCN	L	AWCM	0.961"	1.000"	-	5.906"	-	0.787"	G M8x25 SW6	SW6	G29.02	inch
16,0	16,0	2,0	2,9	**G18.1616.02 R/L**	R	APV6	L	AN1Q	15,0	16,0	9,0	125,0	40,0	20,0	G M8x25 SW6	SW6	G29.02	
20,0	20,0	2,0	2,9	**G18.2020.02 R/L**	R	AJX8	L	ADGW	19,0	20,0	5,0	125,0	40,0	20,0	G M8x25 SW6	SW6	G29.02	
25,0	25,0	2,0	2,9	**G18.2525.02 R/L**	R	AK6D	L	AEY4	24,0	25,0	-	150,0	-	20,0	G M8x25 SW6	SW6	G29.02	
▼ Connectcode = G29.03																		
0.625"	0.625"	3,0	4,0	**G18.0.625.03 R/L**	R	ADD3	L	AAVX	0.564"	0.625"	0.354"	4.921"	1.575"	0.787"	G M8x25 SW6	SW6	G29.03	inch
0.750"	0.750"	3,0	4,0	**G18.0.750.03 R/L**	R	ADZB	L	AJQY	0.691"	0.750"	0.236"	4.921"	1.575"	0.787"	G M8x25 SW6	SW6	G29.03	inch
1.000"	1.000"	3,0	4,0	**G18.1.000.03 R/L**	R	AG8W	L	AKK8	0.941"	1.000"	-	5.906"	-	0.787"	G M8x25 SW6	SW6	G29.03	inch
16,0	16,0	3,0	4,0	**G18.1616.03 R/L**	R	AJW3	L	AMND	14,5	16,0	9,0	125,0	40,0	20,0	G M8x25 SW6	SW6	G29.03	
20,0	20,0	3,0	4,0	**G18.2020.03 R/L**	R	AN7Y	L	AF13	18,5	20,0	5,0	125,0	40,0	20,0	G M8x25 SW6	SW6	G29.03	
25,0	25,0	3,0	4,0	**G18.2525.03 R/L**	R	AE4N	L	ABPE	23,5	25,0	-	150,0	-	20,0	G M8x25 SW6	SW6	G29.03	
32,0	25,0	3,0	4,0	**G18.3225.03 R/L**	R	AJTX	L	AB4U	23,5	32,0	-	170,0	-	20,0	G M8x25 SW6	SW6	G29.03	

Related Items can be found on the following page as well! Continued Table

Order example: **G18.2525.03 R** (R = Right hand version)

Toolholder, External, Regular Cutting Depths

External grooving and turning. Well-balanced ratio of cutting depth and stability.

Tightening torque (screw)
12,0 Nm

TW ST R Legend 29

Scan QR-Code Or Visit **www.simtek.info/cp/1330**

This page contains inch tools! These tools are indicated by **inch** on the right hand side.

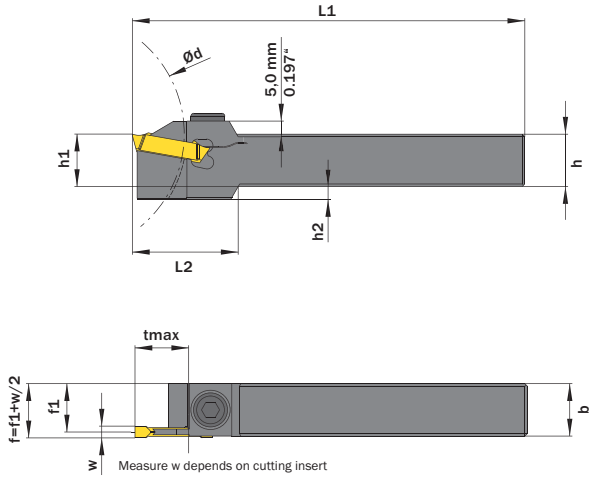

Drawing shows: G18.2020.03 R

tmax depends on workpiece diameter (Ød)	tmax for Shank up to 25,0mm / 0.984"	tmax forShank 32,0mm / 1.260"
up to Ø63,0 mm / up to Ø2.480"	20,0 mm / 0.787"	20,0 mm / 0.787"
up to Ø100,0 mm / up to Ø3.937"	20,0 mm / 0.787"	20,0 mm / 0.787"
up to Ø160,0 mm / up to Ø6.299"	18,6 mm / 0.732"	17,4 mm / 0.685"
up to Ø250,0 mm / up to Ø9.843"	17,1 mm / 0.673"	14,9 mm / 0.587"
up to Ø400,0 mm / up to Ø15.748"	16,1 mm / 0.634"	13,3 mm / 0.524"

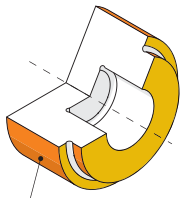

Mainly designed for these surfaces

Also possible depending on insert/fixation type

h mm/inch	b mm/inch	w ≥ mm	w ≤ mm	Part number	Webcode www.simtek.com/webcode	f1 mm/inch	h1 js14 mm/inch	h2 mm/inch	L1 mm/inch	L2 mm/inch	tmax mm/inch	Screw	Screw driver	Connectcode www.simtek.com/ccode	
▼ Connectcode = G29.04															
0.625"	0.625"	4,0	5,0	**G18.0.625.04 R**	A35H	0.546"	0.625"	0.359"	4.921"	1.575"	0.787"	G M8x25 SW6	SW6	G29.04	inch
0.750"	0.750"	4,0	5,1	**G18.0.750.04 R/L**	R AWCH L AWCG	0.671"	0.750"	0.236"	4.921"	1.575"	0.787"	G M8x25 SW6	SW6	G29.04	inch
1.000"	1.000"	4,0	5,1	**G18.1.000.04 R/L**	R AWCQ L AWCP	0.921"	1.000"	-	5.906"	-	0.787"	G M8x25 SW6	SW6	G29.04	inch
20,0	20,0	4,0	5,0	**G18.2020.04 R/L**	R AFMZ L ADK3	18,0	20,0	5,0	125,0	40,0	20,0	G M8x25 SW6	SW6	G29.04	
25,0	25,0	4,0	5,1	**G18.2525.04 R/L**	R AM24 L ANPK	23,0	25,0	-	150,0	-	20,0	G M8x25 SW6	SW6	G29.04	
32,0	25,0	4,0	5,1	**G18.3225.04 R/L**	R AH22 L AKK5	23,0	32,0	-	170,0	-	20,0	G M8x25 SW6	SW6	G29.04	
▼ Connectcode = G29.06															
0.750"	0.750"	5,2	6,0	**G18.0.750.06 R/L**	R AWCK L AWCJ	0.632"	0.750"	0.236"	4.921"	1.575"	0.787"	G M8x25 SW6	SW6	G29.06	inch
1.000"	1.000"	5,2	6,0	**G18.1.000.06 R/L**	R AWCT L AWCS	0.882"	1.000"	-	5.906"	-	0.787"	G M8x25 SW6	SW6	G29.06	inch
20,0	20,0	5,2	6,0	**G18.2020.06 R/L**	R ACNE L ACEA	17,0	20,0	5,0	125,0	40,0	20,0	G M8x25 SW6	SW6	G29.06	
25,0	25,0	5,2	6,0	**G18.2525.06 R/L**	R ABN5 L ADJG	22,0	25,0	-	150,0	-	20,0	G M8x25 SW6	SW6	G29.06	
32,0	25,0	5,2	6,0	**G18.3225.06 R/L**	R AE9N L APHE	22,0	32,0	-	170,0	-	20,0	G M8x25 SW6	SW6	G29.06	

Continued Table **Related Items can be found on the previous page as well!**

Order example: **G18.2020.04 R** (R = Right hand version)

Cassette for Modular Tool System TOA

For use on SIMTEK CAPTO™ TOA-base toolholder
with polygon shank according to ISO 26623.

Tightening torque (screw)
7,0 Nm

TW ST R Legend 29

Scan **QR-Code** Or Visit **www.simtek.info/cp/1182**

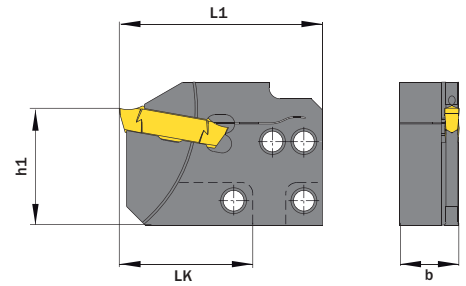

Measure w depends on cutting insert

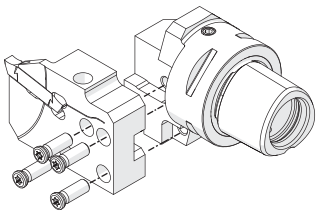

Screw for cassette mounting
T M5x15 T20R

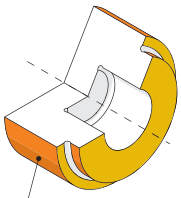

Mainly designed for these surfaces

Also possible depending on insert/fixation type

Drawing shows: TOA.G18.36.04 R

w ≥ mm	w ≤ mm	Part number	Webcode www.simtek.com/webcode	b mm	f1 mm	h1 mm	LK mm	L1 mm	tmax mm	Screw	Screw driver	Connectcode www.simtek.com/ccode	Adaptcode
▼ Connectcode = G29.02													
2,0	2,9	**TOA.G18.36.02 R/L**	R AZA4 L AZA3	16,0	15,05	31,6	36,0	54,9	20,0	G M5x12 T20T	T20T	G29.02	TOA
▼ Connectcode = G29.03													
3,0	4,0	**TOA.G18.36.03 R/L**	R AZA6 L AZA5	16,0	14,7	31,6	36,0	54,9	20,0	G M5x12 T20T	T20T	G29.03	TOA
▼ Connectcode = G29.04													
4,0	5,1	**TOA.G18.36.04 R/L**	R AZA8 L AZA7	16,0	14,2	31,6	36,0	54,9	20,0	G M5x12 T20T	T20T	G29.04	TOA
▼ Connectcode = G29.06													
5,2	6,0	**TOA.G18.36.06 R/L**	R AZBA L AZA9	16,0	13,25	31,6	36,0	54,9	20,0	G M5x12 T20T	T20T	G29.06	TOA

Order example: **TOA.G18.36.02 R** (R = Right hand version)

Toolholder, External, Maximum Cutting Depths

External grooving. Maximum depth of cut.

Tightening torque (screw)

12,0 Nm

TW ST | R | Legend **29**

Scan **QR-Code** | Or Visit **www.simtek.info/cp/516**

This page contains inch tools! These tools are indicated by **inch** on the right hand side.

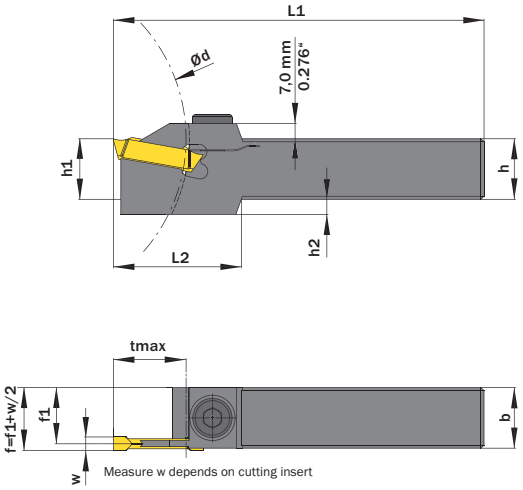

Drawing shows: G26.2020.03 R

tmax depends on workpiece diameter (Ød)	tmax for Shank up to 25,0mm / 0.984"	tmax for Shank 32,0mm / 1.260"
up to Ø63,0 mm / up to Ø2.480"	26,0 mm / 1.024"	26,0 mm / 1.024"
up to Ø100,0 mm / up to Ø3.937"	20,4 mm / 0.803"	11,7 mm / 0.461"
up to Ø160,0 mm / up to Ø6.299"	17,7 mm / 0,697"	7,3 mm / 0.287"
up to Ø250,0 mm / up to Ø9.843"	16,2 mm / 0.638"	5,0 mm / 0.197"
up to Ø400,0 mm / up to Ø15.748"	15,2 mm / 0,598"	3,5 mm / 0.138"

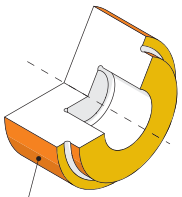

Mainly designed for these surfaces

Also possible depending on insert/fixation type

h mm/inch	b mm/inch	w ≥ mm	w ≤ mm	Part number	Webcode www.simtek.com/webcode	f1 mm/inch	h1 js14 mm/inch	h2 mm/inch	L1 mm/inch	L2 mm/inch	tmax mm/inch	Screw	Screw driver	Connectcode www.simtek.com/ccode	
▼ Connectcode = G29.02															
16,0	16,0	2,0	2,9	**G26.1616.02 R/L**	R AFNJ L AG77	15,0	16,0	9,0	125,0	44,0	26,0	G M8x25 SW6	SW6	G29.02	
20,0	20,0	2,0	2,9	**G26.2020.02 R/L**	R APPM L AB6T	19,0	20,0	7,0	125,0	44,0	26,0	G M8x25 SW6	SW6	G29.02	
25,0	25,0	2,0	2,9	**G26.2525.02 R/L**	R AEN2 L AA9J	24,0	25,0	-	150,0	-	26,0	G M8x25 SW6	SW6	G29.02	
▼ Connectcode = G29.03															
1.000"	1.000"	3,0	4,0	**G26.1.000.03 R/L**	R A35N L A35Q	0.941"	1.000"	-	5.906"	-	1.024"	G M8x25 SW6	SW6	G29.03	inch
16,0	16,0	3,0	4,0	**G26.1616.03 R/L**	R AMDX L AF5A	14,5	16,0	9,0	125,0	44,0	26,0	G M8x25 SW6	SW6	G29.03	
20,0	20,0	3,0	4,0	**G26.2020.03 R/L**	R AMUV L AAFZ	18,5	20,0	7,0	125,0	44,0	26,0	G M8x25 SW6	SW6	G29.03	
25,0	25,0	3,0	4,0	**G26.2525.03 R/L**	R AHT2 L ANW0	23,5	25,0	-	150,0	-	26,0	G M8x25 SW6	SW6	G29.03	
32,0	25,0	3,0	4,0	**G26.3225.03 R/L**	R AKGD L ABNG	23,5	32,0	-	170,0	-	26,0	G M8x25 SW6	SW6	G29.03	
▼ Connectcode = G29.04															
1.000"	1.000"	4,0	5,1	**G26.1.000.04 R/L**	R A3A2 L A3A3	0.921"	25,4	-	5.906"	-	1.024"	G M8x25 SW6	SW6	G29.04	inch
20,0	20,0	4,0	5,1	**G26.2020.04 R/L**	R AF22 L AC73	18,0	20,0	7,0	125,0	44,0	26,0	G M8x25 SW6	SW6	G29.04	
25,0	25,0	4,0	5,1	**G26.2525.04 R/L**	R AHU2 L AB1C	23,0	25,0	-	150,0	-	26,0	G M8x25 SW6	SW6	G29.04	
32,0	25,0	4,0	5,1	**G26.3225.04 R/L**	R AH65 L AHKX	23,0	32,0	-	170,0	-	26,0	G M8x25 SW6	SW6	G29.04	
▼ Connectcode = G29.06															
25,0	25,0	5,2	6,0	**G26.2525.06 R/L**	R AAX3 L AC8S	22,0	25,0	-	150,0	-	26,0	G M8x25 SW6	SW6	G29.06	

Order example: **G26.2525.03 R** (R = Right hand version)

Cassette for Modular Tool System TOA

For use on SIMTEK base toolholder with polygon shank according to ISO 26623.

Tightening torque (screw)
7,0 Nm

TW ST R Legend **29**

Scan **QR-Code** Or Visit **www.simtek.info/cp/1177**

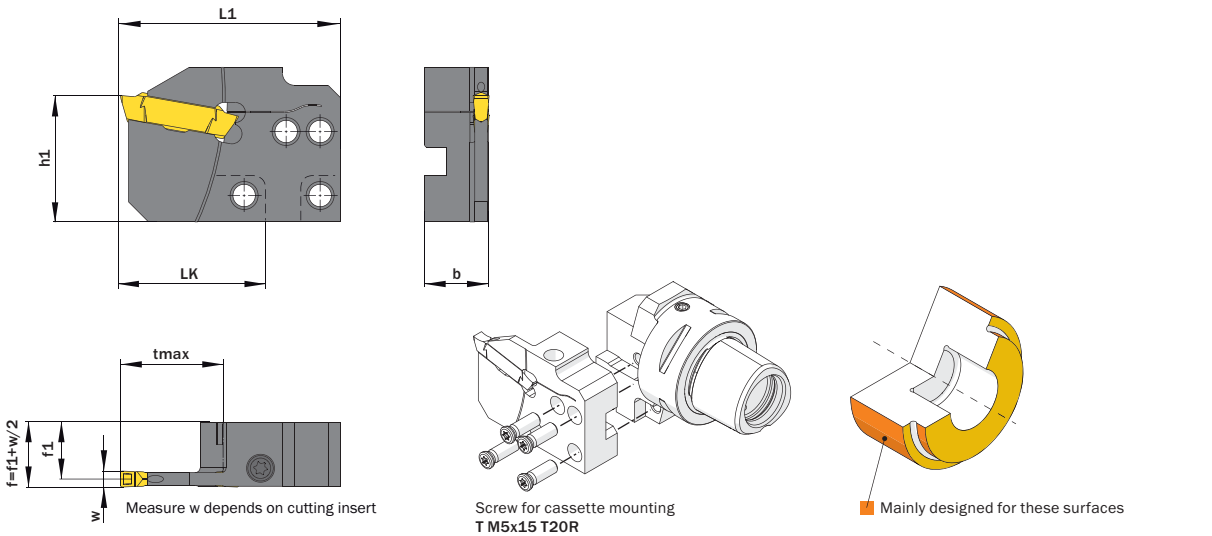

Drawing shows: TOA.G25.36.04 R

w ≥ mm	w ≤ mm	Part number	Webcode www.simtek.com/webcode	b mm	f1 mm	h1 mm	L1 mm	tmax mm	LK mm	Screw	Screw driver	Connectcode www.simtek.com/ccode	Adaptcode
4,0	5,1	**TOA.G25.36.04 R/L**	R AZBC L AZBB	16,0	14,2	31,6	54,9	25,0	36,0	G M5x15 T20T	T20T	G29.04	TOA

Order example: **TOA.G25.36.04 R** (R = Right hand version)

Toolholder, External, Maximum Cutting Depths on larger work pieces

External grooving. Maximum depth of cut on larger work piece diameters.

Tightening torque (screw)

12,0 Nm

TW ST R Legend **29**

Scan **QR-Code** Or Visit **www.simtek.info/cp/530**

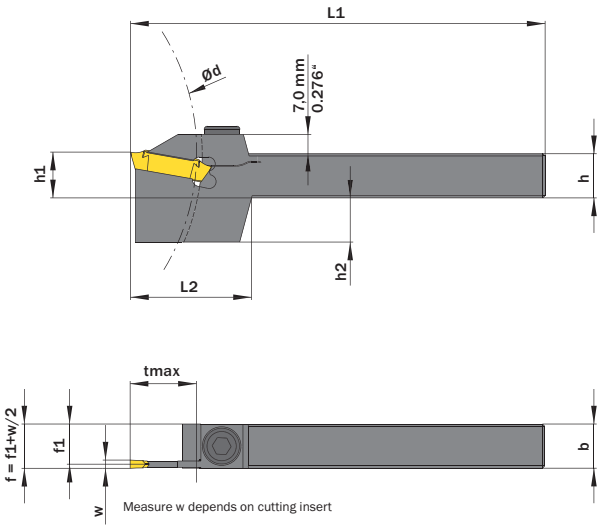

Drawing shows: G24.1616.03 R

tmax depends from Workpiece diameter (Ød)	tmax for Shank up to 0.984"	tmax for Shank 1.260"
Bis Ø63,0 mm / up to Ø2.480"	25,0 mm / 0.984"	25,0 mm / 0.984"
Bis Ø100,0 mm / up to Ø3.937"	25,0 mm / 0.984"	25,0 mm / 0.984"
Bis Ø160,0 mm / up to Ø6.299"	24,7 mm / 0.972"	24,5 mm / 0.965"
Bis Ø250,0 mm / up to Ø9.843"	23,2 mm / 0.913"	22,0 mm / 0.866"
Bis Ø400,0 mm / up to Ø15.748"	22,3 mm / 0.878"	20,4 mm / 0.803"

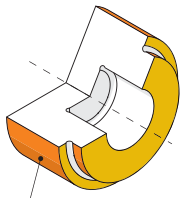

Mainly designed for these surfaces

Also possible depending on insert/fixation type

h mm	b mm	w ≥ mm	w ≤ mm	Part number	Webcode www.simtek.com/webcode	f1 mm	h1 js14 mm	h2 mm	L1 mm	L2 mm	tmax mm	Screw	Screw driver	Connectcode www.simtek.com/ccode
▼ Connectcode = G29.03														
16,0	16,0	3,0	4,0	**G24.1616.03 R/L**	R AHVW L AJMU	14,5	16,0	16,0	125,0	42,5	25,0	G M8x25 SW6	SW6	G29.03
20,0	20,0	3,0	4,0	**G24.2020.03 R/L**	R AAXQ L AFW5	18,5	20,0	12,0	125,0	42,5	25,0	G M8x25 SW6	SW6	G29.03
25,0	25,0	3,0	4,0	**G24.2525.03 R/L**	R AMNY L AD48	23,5	25,0	7,0	150,0	42,5	25,0	G M8x25 SW6	SW6	G29.03
32,0	25,0	3,0	4,0	**G24.3225.03 R/L**	R AMV8 L ADZG	23,5	32,0	-	170,0	-	25,0	G M8x25 SW6	SW6	G29.03
▼ Connectcode = G29.04														
16,0	16,0	4,0	5,1	**G24.1616.04 R/L**	R AHN5 L AJGS	14,0	16,0	16,0	125,0	42,5	25,0	G M8x25 SW6	SW6	G29.04
20,0	20,0	4,0	5,1	**G24.2020.04 R/L**	R APFE L ABPG	18,0	20,0	12,0	125,0	42,5	25,0	G M8x25 SW6	SW6	G29.04
25,0	25,0	4,0	5,1	**G24.2525.04 R/L**	R APWY L AAA1	23,0	25,0	7,0	150,0	42,5	25,0	G M8x25 SW6	SW6	G29.04
32,0	25,0	4,0	5,1	**G24.3225.04 R/L**	R AEPG L AD1M	23,0	32,0	-	170,0	-	25,0	G M8x25 SW6	SW6	G29.04

Order example: **G24.2525.03 R** (R = Right hand version)

Toolholder, External, Highest Stability

External grooving and turning. Reduced depth of cut for best stability.

Tightening torque (screw)
12,0 Nm

TW ST R Legend 29

Scan QR-Code Or Visit **www.simtek.info/cp/527**

This page contains inch tools! These tools are indicated by inch on the right hand side.

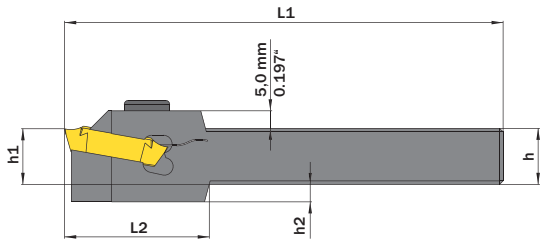

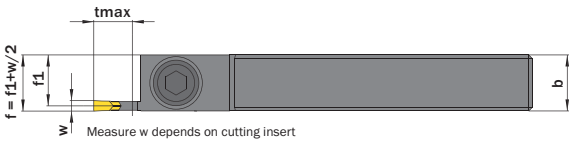

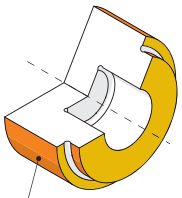

Mainly designed for these surfaces

Also possible depending on insert/fixation type

Drawing shows: G10.1616.03 R

h mm/inch	b mm/inch	w ≥ mm	w ≤ mm	Part number	Webcode www.simtek.com/webcode	f1 mm/inch	h1 js14 mm/inch	h2 mm/inch	L1 mm/inch	L2 mm/inch	tmax mm/inch	Screw	Screw driver	Connectcode www.simtek.com/ccode	
▼ Connectcode = G29.02															
16,0	16,0	2,0	2,9	**G10.1616.02 R/L**	R AHUF L ADUC	15,0	16,0	9,0	125,0	35,0	11,0	G M8x25 SW6	SW6	G29.02	
20,0	20,0	2,0	2,9	**G10.2020.02 R/L**	R AFA4 L AKB7	19,0	20,0	5,0	125,0	35,0	11,0	G M8x25 SW6	SW6	G29.02	
25,0	25,0	2,0	2,9	**G10.2525.02 R/L**	R AF59 L AMG5	24,0	25,0	-	150,0	-	11,0	G M8x25 SW6	SW6	G29.02	
▼ Connectcode = G29.03															
16,0	16,0	3,0	4,0	**G10.1616.03 R/L**	R ABYD L AA1Q	14,5	16,0	9,0	125,0	35,0	11,0	G M8x25 SW6	SW6	G29.03	
20,0	20,0	3,0	4,0	**G10.2020.03 R/L**	R AKKG L AMZF	18,5	20,0	5,0	125,0	35,0	11,0	G M8x25 SW6	SW6	G29.03	
25,0	25,0	3,0	4,0	**G10.2525.03 R/L**	R AHY4 L AMWS	23,5	25,0	-	150,0	-	11,0	G M8x25 SW6	SW6	G29.03	
32,0	25,0	3,0	4,0	**G10.3225.03 R/L**	R AX4J L AX4H	23,5	32,0	-	170,0	-	11,0	G M8x25 SW6	SW6	G29.03	
▼ Connectcode = G29.04															
16,0	16,0	4,0	5,1	**G10.1616.04 R/L**	R AB68 L AFUD	14,0	16,0	9,0	125,0	35,0	11,0	G M8x25 SW6	SW6	G29.04	
20,0	20,0	4,0	5,1	**G10.2020.04 R/L**	R AG85 L AE7N	18,0	20,0	5,0	125,0	35,0	11,0	G M8x25 SW6	SW6	G29.04	
25,0	25,0	4,0	5,1	**G10.2525.04 R/L**	R AJHC L ANMQ	23,0	25,0	-	150,0	-	11,0	G M8x25 SW6	SW6	G29.04	
32,0	25,0	4,0	5,1	**G10.3225.04 R/L**	R AX4K L AX4M	23,0	32,0	-	170,0	-	11,0	G M8x25 SW6	SW6	G29.04	
▼ Connectcode = G29.06															
1.000"	1.000"	5,2	6,0	**G10.1.000.06 R**	A3V7	0.882"	1.000"	-	5.906"	-	0.433"	G M8x25 SW6	SW6	G29.06	inch
20,0	20,0	5,2	6,0	**G10.2020.06 R/L**	R ADHN L AA1K	17,0	20,0	5,0	125,0	35,0	11,0	G M8x25 SW6	SW6	G29.06	
25,0	25,0	5,2	6,0	**G10.2525.06 R/L**	R ANQ7 L ACZC	22,0	25,0	-	150,0	-	11,0	G M8x25 SW6	SW6	G29.06	
32,0	25,0	5,2	6,0	**G10.3225.06 R/L**	R AX4P L AX4N	22,0	32,0	-	170,0	-	11,0	G M8x25 SW6	SW6	G29.06	

Order example: **G10.2525.04 R** (R = Right hand version)

Cassette for Modular Tool System TOA

For use on SIMTEK base toolholder with polygon shank according to ISO 26623.

Tightening torque (screw)
7,0 Nm

TW ST R Legend **29**

Scan **QR-Code** Or Visit **www.simtek.info/cp/1181**

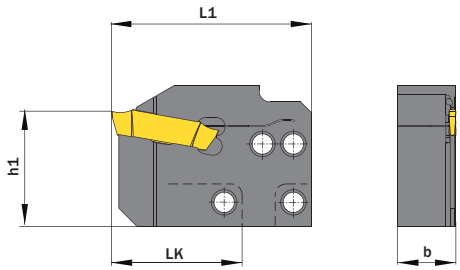

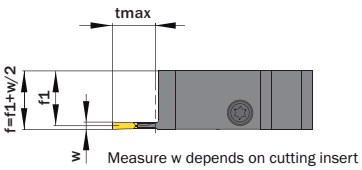

Measure w depends on cutting insert

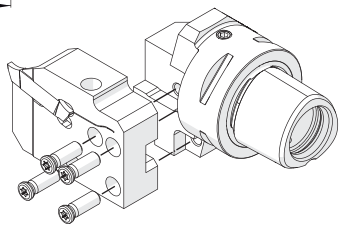

Screw for cassette mounting
T M5x15 T20R

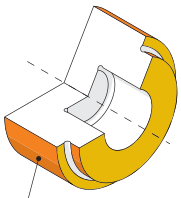

Mainly designed for these surfaces

Also possible depending on insert/fixation type

Drawing shows: TOA.G10.36.02 R

w ≥ mm	w ≤ mm	Part number	Webcode www.simtek.com/webcode	b mm	f1 mm	h1 mm	LK mm	L1 mm	tmax mm	Screw	Screw driver	Connectcode www.simtek.com/ccode	Adaptcode
▼ Connectcode = G29.02													
2,0	2,9	**TOA.G10.36.02 R/L**	R AZAW L AZAV	16,0	15,05	31,6	36,0	54,9	11,0	G M5x12 T20T	T20T	G29.02	TOA
▼ Connectcode = G29.03													
3,0	4,0	**TOA.G10.36.03 R/L**	R AZAY L AZAX	16,0	14,7	31,6	36,0	54,9	11,0	G M5x12 T20T	T20T	G29.03	TOA
▼ Connectcode = G29.04													
4,0	5,1	**TOA.G10.36.04 R/L**	R AZA0 L AZAZ	16,0	14,2	31,6	36,0	54,9	11,0	G M5x12 T20T	T20T	G29.04	TOA
▼ Connectcode = G29.06													
5,2	6,0	**TOA.G10.36.06 R/L**	R AZA2 L AZA1	16,0	13,25	31,6	36,0	54,9	11,0	G M5x12 T20T	T20T	G29.06	TOA

Order example: **TOA.G10.36.02 R** (R = Right hand version)

Toolholder, External, Cranked

External grooving. 90° version.

Tightening torque (screw)
12,0 Nm

TW ST R Legend 29

Scan QR-Code Or Visit **www.simtek.info/cp/528**

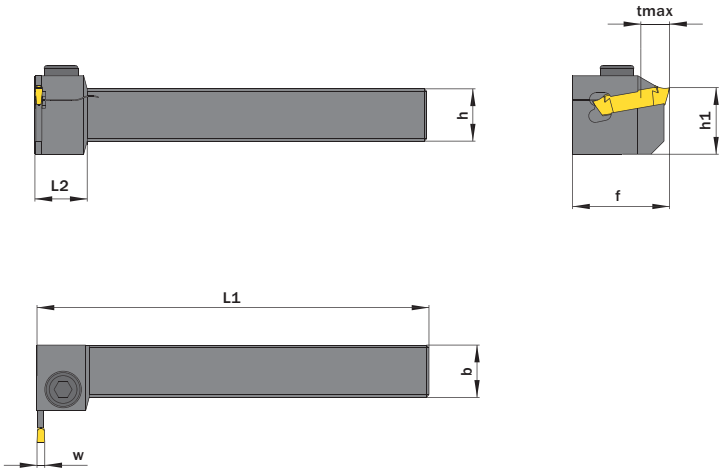

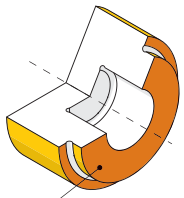

Mainly designed for these surfaces

Also possible depending on insert/fixation type

Drawing shows: G19.2020.03 R

h mm	b mm	w ≥ mm	w ≤ mm	Part number	Webcode www.simtek.com/webcode	f mm	h1 mm	L1 mm	L2 mm	tmax mm	Screw	Screw driver	Connectcode www.simtek.com/ccode
▼ Connectcode = G29.03													
20,0	20,0	3,0	4,0	**G19.2020.03 R/L**	R AEYW L AP4K	37,0	25,0	125,0	20,0	11,0	G M8x25 SW6	SW6	G29.03
25,0	25,0	3,0	4,0	**G19.2525.03 R/L**	R APW8 L ABXK	37,0	25,0	150,0	20,0	11,0	G M8x25 SW6	SW6	G29.03
▼ Connectcode = G29.04													
20,0	20,0	4,0	5,0	**G19.2020.04 R/L**	R AMSP L ADJP	37,0	25,0	125,0	20,0	11,0	G M8x25 SW6	SW6	G29.04
25,0	25,0	4,0	5,0	**G19.2525.04 R/L**	R AD2P L AND1	37,0	25,0	150,0	20,0	11,0	G M8x25 SW6	SW6	G29.04
▼ Connectcode = G29.06													
20,0	20,0	5,2	6,0	**G19.2020.06 R/L**	R ATW9 L ATW8	45,0	25,0	125,0	20,0	15,0	G M8x25 SW6	SW6	G29.06
25,0	25,0	5,2	6,0	**G19.2525.06 R/L**	R ATW7 L ATW6	45,0	25,0	150,0	20,0	15,0	G M8x25 SW6	SW6	G29.06

Order example: **G19.2525.04 R** (R = Right hand version)

Toolholder, Internal, Long Version

Internal grooving and turning.

Tightening torque (screw)
12,0 Nm

TW ST R Legend 29

Scan QR-Code Or Visit **www.simtek.info/cp/518**

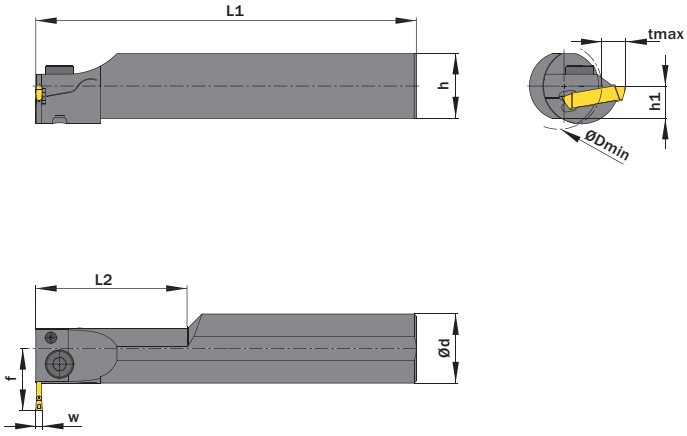

Drawing shows: G14.0032.03 R

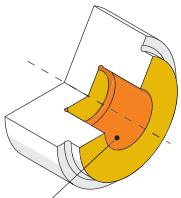

Mainly designed for these surfaces

Also possible depending on insert type

Ød g6 mm	w ≥ mm	w ≤ mm	Part number	Webcode www.simtek.com/webcode	ØDmin (min. bore) mm	f mm	h mm	h1 js14 mm	L1 mm	L2 mm	tmax mm	Screw	Screw driver	Connectcode www.simtek.com/ccode
▼ Connectcode = G29.02														
32,0	2,0	2,9	**G14.0032.02 R/L**	R AGAF L AAPV	40,0	28,0	30,0	15,0	200,0	70,0	11,0	GM8x16SW6	SW6	G29.02
▼ Connectcode = G29.03														
32,0	3,0	4,0	**G14.0032.03 R/L**	R AD7N L ANU3	40,0	28,0	30,0	15,0	200,0	70,0	11,0	GM8x16SW6	SW6	G29.03
40,0	3,0	4,0	**G14.0040.03 R/L**	R ACQK L AP3M	50,0	32,0	38,0	19,0	250,0	80,0	11,0	GM8x16SW6	SW6	G29.03
50,0	3,0	4,0	**G14.0050.03 R/L**	R AM2B L ADAK	60,0	40,5	47,0	23,5	250,0	100,0	15,0	GM8x16SW6	SW6	G29.03
▼ Connectcode = G29.04														
32,0	4,0	5,1	**G14.0032.04 R/L**	R AGAV L AC29	40,0	28,0	30,0	15,0	200,0	70,0	11,0	GM8x16SW6	SW6	G29.04
40,0	4,0	5,1	**G14.0040.04 R/L**	R AN0C L AEKS	50,0	32,0	38,0	19,0	250,0	80,0	11,0	GM8x16SW6	SW6	G29.04
50,0	4,0	5,1	**G14.0050.04 R/L**	R ADET L ANCK	60,0	40,5	47,0	23,5	250,0	100,0	15,0	GM8x16SW6	SW6	G29.04
▼ Connectcode = G29.06														
32,0	5,2	6,0	**G14.0032.06 R/L**	R ADZY L AFXG	40,0	28,0	30,0	15,0	200,0	70,0	11,0	GM8x16SW6	SW6	G29.06
40,0	5,2	6,0	**G14.0040.06 R/L**	R AA6Q L AHTW	50,0	32,0	38,0	19,0	250,0	80,0	11,0	GM8x16SW6	SW6	G29.06
50,0	5,2	6,0	**G14.0050.06 R/L**	R ANV3 L AN1J	60,0	40,5	47,0	23,5	250,0	100,0	15,0	GM8x16SW6	SW6	G29.06

Order example: **G14.0032.03 R** (R = Right hand version)

Toolholder, Internal, Short Version

Internal grooving and turning.

Tightening torque (screw)

"G M5x16 T20T": 7,0 Nm
"G M8x16 SW6": 12,0 Nm

TW ST R Legend 29

Scan QR-Code Or Visit **www.simtek.info/cp/517**

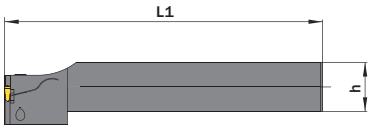

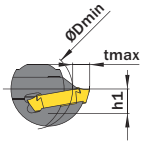

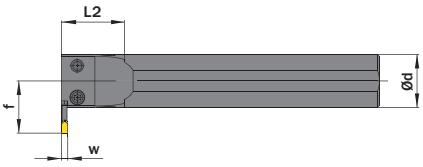

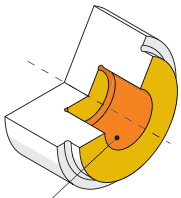

Mainly designed for these surfaces

Also possible depending on insert type

Drawing shows: G13.0025.03 R

Ød g6 mm	w ≥ mm	w ≤ mm	Part number	Webcode www.simtek.com/webcode	ØDmin (Min. Bohrung) ØDmin (min. bore) mm	f mm	h mm	h1 js14 mm	L1 mm	L2 mm	tmax mm	Screw	Screw driver	Connectcode www.simtek.com/ccode
▼ Connectcode = G29.03														
25,0	3,0	4,0	**G13.0025.03 R/L**	R AGA2 L ABW9	38,0	24,5	23,0	11,5	150,0	30,0	11,0	G M5x16 T20T	T20T	G29.03
32,0	3,0	4,0	**G13.0032.03 R/L**	R ADMW L AKKY	38,0	28,0	30,0	15,0	150,0	30,0	11,0	G M8x16 SW6	SW6	G29.03
40,0	3,0	4,0	**G13.0040.03 R/L**	R AFKV L AAF7	50,0	32,0	38,0	19,0	180,0	30,0	11,0	G M8x16 SW6	SW6	G29.03
50,0	3,0	4,0	**G13.0050.03 R/L**	R ABWD L AKHD	60,0	40,5	47,0	23,5	200,0	30,0	15,0	G M8x16 SW6	SW6	G29.03
▼ Connectcode = G29.04														
25,0	4,0	5,1	**G13.0025.04 R/L**	R ACB9 L AM41	38,0	24,5	23,0	11,5	150,0	30,0	11,0	G M5x16 T20T	T20T	G29.04
32,0	4,0	5,1	**G13.0032.04 R/L**	R AN4Q L AH0C	38,0	28,0	30,0	15,0	150,0	30,0	11,0	G M8x16 SW6	SW6	G29.04
40,0	4,0	5,1	**G13.0040.04 R/L**	R AMTN L APHN	50,0	32,0	38,0	19,0	180,0	30,0	11,0	G M8x16 SW6	SW6	G29.04
50,0	4,0	5,1	**G13.0050.04 R/L**	R ABWN L AC9W	60,0	40,5	47,0	23,5	200,0	30,0	15,0	G M8x16 SW6	SW6	G29.04
▼ Connectcode = G29.06														
32,0	5,2	6,0	**G13.0032.06 R/L**	R AFEK L AE8Q	38,0	28,0	30,0	15,0	150,0	30,0	11,0	G M8x16 SW6	SW6	G29.06
40,0	5,2	6,0	**G13.0040.06 R/L**	R AHFN L AKXC	50,0	32,0	38,0	19,0	180,0	30,0	11,0	G M8x16 SW6	SW6	G29.06
50,0	5,2	6,0	**G13.0050.06 R/L**	R AD53 L AC5C	60,0	40,5	47,0	23,5	200,0	30,0	15,0	G M8x16 SW6	SW6	G29.06

Order example: **G13.0032.03 R** (R = Right hand version)

Toolholder, External, Corner Reliefs

External corner reliefs.

Tightening torque (screw)
12,0 Nm

TW ST R Legend 29

Scan **QR-Code** Or Visit **www.simtek.info/cp/535**

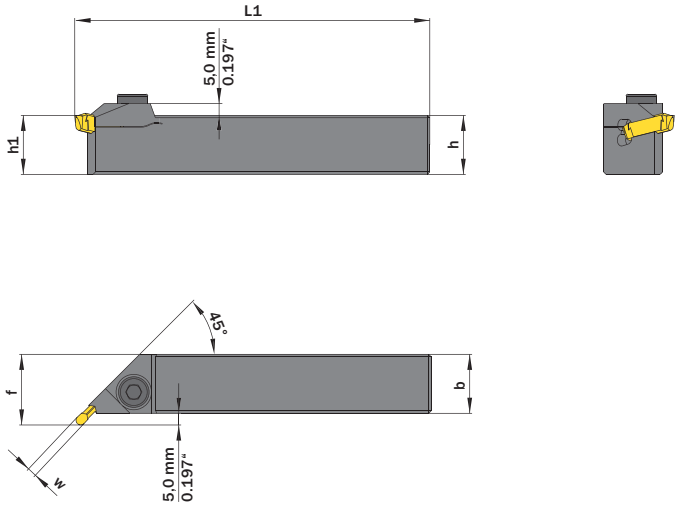

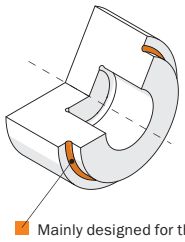

Drawing shows: G25.25252.04 R

h mm	b mm	w ≥ mm	w ≤ mm	Part number	Webcode www.simtek.com/webcode	f mm	h1 js14 mm	L1 mm	Screw	Screw driver	Connectcode www.simtek.com/ccode
25,0	25,0	3,0	4,0	**G25.2525.04 R/L**	R AJUW L AB04	30,0	25,0	150,0	G M8x25 SW6	SW6	G29.03

Order example: **G25.2525.04 R** (R = Right hand version)

Grooving and Profiling

CNC profiling. Ground, round geometry.

Cutting parameters (start)		
f (ext.) **0,05 mm/U**	f (int.) **0,04 mm/U**	Vc **Page 31**

Suitable toolholders on page
6, 7, 8, 9, 10, 11, 12, 13, 14, 15, 16, 17

SP HM Legend **29**

Scan **QR-Code** Or Visit **www.simtek.info/cp/519**

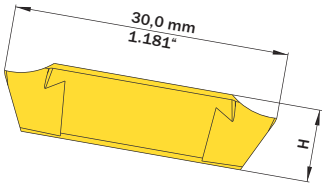

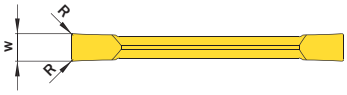

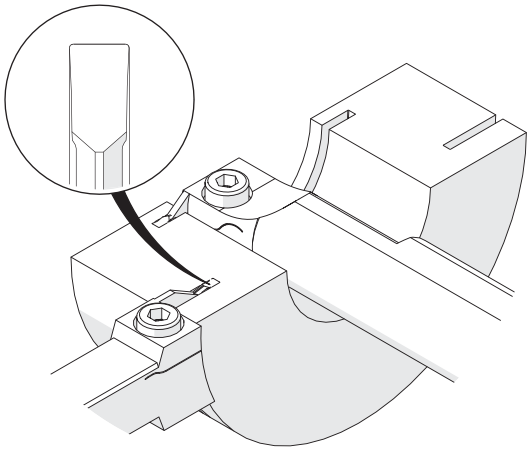

Drawing shows: G29.0300.10 S

w +0,05 mm	Part number	Webcode www.simtek.com/webcode	Our first choice P	K	M	N	S	H mm	R mm	Connectcode www.simtek.com/ccode
2,0	**G29.0200.10 S**	AH87	X800			X400		7,9	0,2	G29.02
2,5	**G29.0250.10 S**	AG6S	X800			X400		7,9	0,2	G29.02
3,0	**G29.0300.10 S**	ACA7	X800			X400		7,9	0,2	G29.03
4,0	**G29.0400.10 S**	AES9	X800			X400		7,9	0,2	G29.03 | G29.04
5,0	**G29.0500.10 S**	AFY3	X800			X400		7,9	0,2	G29.04
6,0	**G29.0600.10 S**	AJKN	X800			X400		7,5	0,2	G29.06

Order example: **G29.0300.10 S X800** (X800 = Grade)

Grooving and Profiling

CNC profiling. Ground, flat geometry.

Cutting parameters (start)		
f (ext.) **0,05 mm/U**	f (int.) **0,04 mm/U**	Vc **Page 31**

Suitable toolholders on page
6, 7, 8, 9, 10, 11, 12, 13, 14, 15, 16, 17

SP CBN | SP HM | Legend **29**

Scan **QR-Code** | Or Visit **www.simtek.info/cp/520**

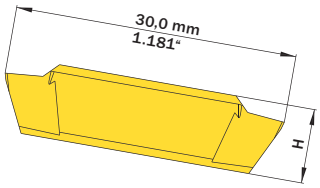

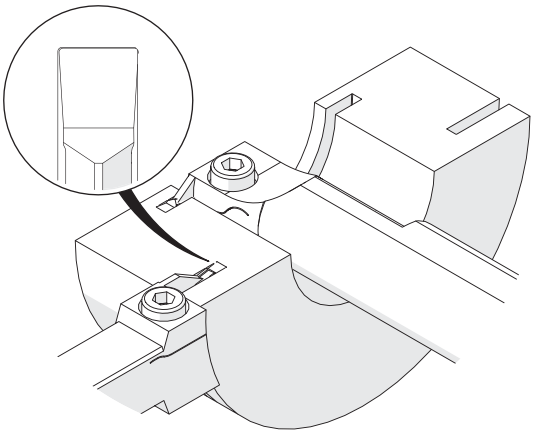

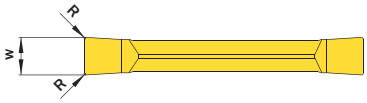

Drawing shows: G29.0400.20 S

w +0,05 mm	Part number	Webcode www.simtek.com/webcode	Our first choice P K M N S	H mm	R mm	Connectcode www.simtek.com/ccode
3,0	**G29.0300.20 S**	AMDB	X800 X400	7,9	0,2	G29.03
4,0	**G29.0400.20 S**	ABMU	X800 X400	7,9	0,2	G29.03 | G29.04
5,0	**G29.0500.20 S**	APU5	X800 X400	7,9	0,2	G29.04
6,0	**G29.0600.20 S**	AB3V	X800 X400	7,5	0,4	G29.06

Order example: **G29.0300.20 S X800** (X800 = Grade)

Grooving and Profiling

CNC profiling. Sintered geometry for improved chip control.

Cutting parameters (start)		
f (ext.) **0,12 mm/U**	f (int.) **0,09 mm/U**	Vc **Page 31**

Suitable toolholders on page
6, 7, 8, 9, 10, 11, 12, 13, 14, 15, 16, 17

SP HM Legend **29**

Scan **QR-Code** Or Visit **www.simtek.info/cp/521**

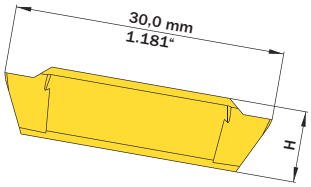

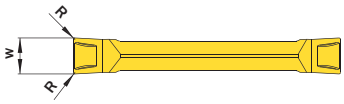

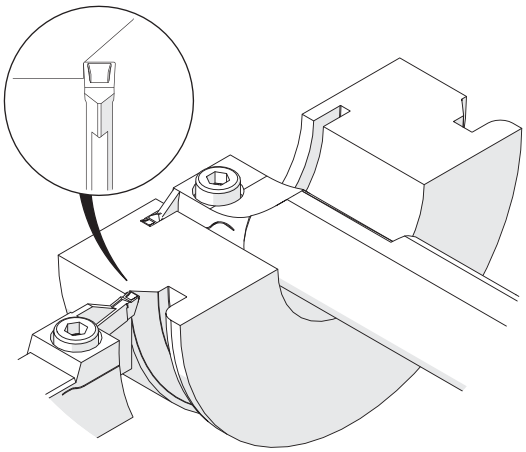

Drawing shows: G29.0400.32 S

w +0,05 mm	R mm	Part number	Webcode www.simtek.com/webcode	Our first choice P K M N S	H mm	Connectcode www.simtek.com/ccode
2,0	0,2	**G29.0200.32 S**	ABNM	X800 X400	7,9	G29.02
2,5	0,2	**G29.0250.32 S**	AHMB	X800 X400	7,9	G29.02
3,0	0,2	**G29.0300.32 S**	AFPT	X800 X400	7,9	G29.03
3,0	0,4	**G29.0300.34 S**	AN8A	X800 X400	7,9	G29.03
4,0	0,2	**G29.0400.32 S**	AJK1	X800 X400	7,9	G29.03 | G29.04
4,0	0,4	**G29.0400.34 S**	AAE0	X800 X400	7,9	G29.03 | G29.04
5,0	0,4	**G29.0500.34 S**	AN6E	X800 X400	7,9	G29.04
6,0	0,4	**G29.0600.34 S**	AE8G	X800 X400	7,5	G29.06
6,0	0,8	**G29.0600.38 S**	ANYA	X800 X400	7,5	G29.06

Order example: **G29.0300.32 S X800** (X800 = Grade)

Grooving and Profiling

CNC pofiling. Sintered geometry for improved chip control.

Cutting parameters (start)		
f (ext.) **0,12 mm/U**	f (int.) **0,09 mm/U**	Vc **Page 31**

Suitable toolholders on page
6, 7, 8, 9, 10, 11, 12, 13, 14, 15, 16, 17

SP HM Legend **29**

Scan **QR-Code** Or Visit **www.simtek.info/cp/522**

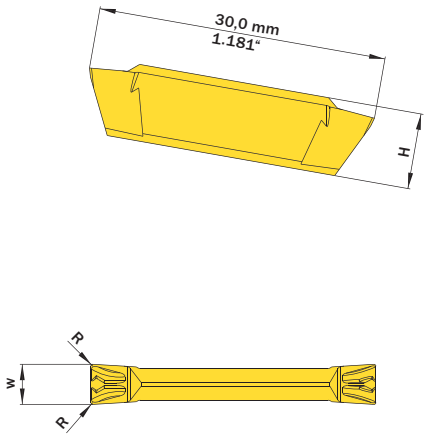

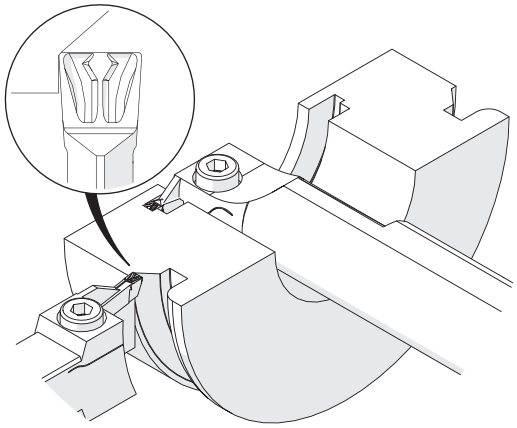

Drawing shows: G29.0400.52 S

w ±0,05 mm	R mm	Part number	Webcode www.simtek.com/webcode	ur first choice P K M N S	H mm	Connectcode www.simtek.com/ccode
4,0	0,2	**G29.0400.52 S**	APMU	X800 X400	7,9	G29.03 | G29.04
4,0	0,4	**G29.0400.54 S**	AF87	X800 X400	7,9	G29.03 | G29.04

Order example: **G29.0400.54 S X800** (X800 = Grade)

Grooving and Profiling, Full Radius

Full radius, CNC profiling.

Cutting parameters (start)		
f (ext.) **0,05 mm/U**	f (int.) **0,04 mm/U**	Vc **Page 31**

Suitable toolholders on page
6, 7, 8, 9, 10, 11, 12, 13, 14, 15, 16, 17

SP HM Legend **29**

Scan **QR-Code** Or Visit **www.simtek.info/cp/523**

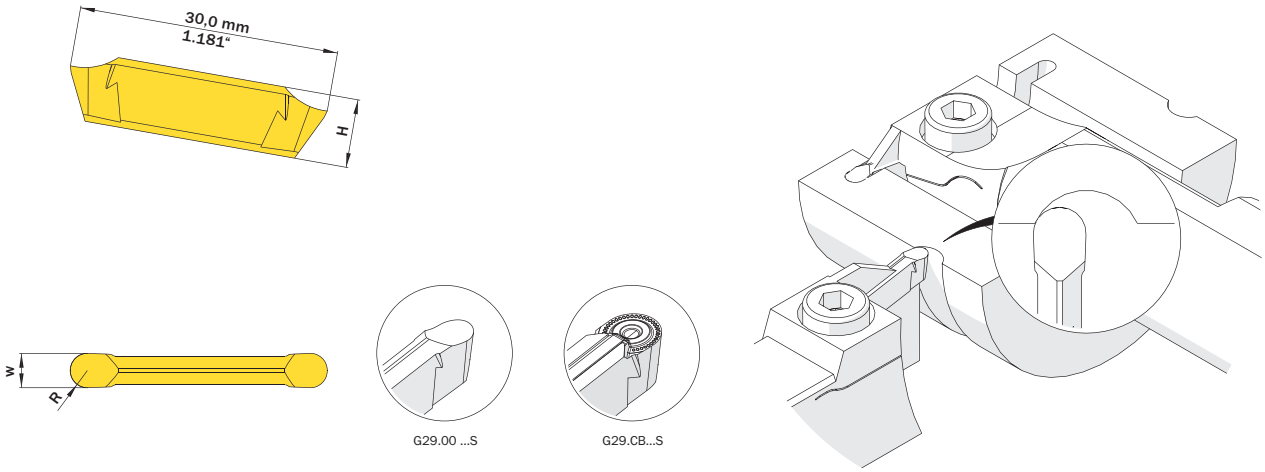

Drawing shows: G29.0040.20 S

w +0,05 mm	R mm	Part number	Webcode www.simtek.com/webcode	Unsere erste Wahl / Our first choice P K M N S	H mm	Connectcode www.simtek.com/ccode
▼ w = 2,0 mm						
2,0	1,0	**G29.0020.10 S**	ADWN	X800 X400	7,9	G29.02
▼ w = 3,0 mm						
3,0	1,5	**G29.0030.15 S**	ANAZ	X800 X400	7,9	G29.03
▼ w = 4,0 mm						
4,0	2,0	**G29.0040.20 S**	AK7N	X800 X400	7,9	G29.03 | G29.04
4,0	2,0	**G29.CB40.20 S**	A2WM	X800 X400	7,9	G29.03 | G29.04
▼ w = 5,0 mm						
5,0	2,5	**G29.0050.25 S**	ANTE	X800 X400	7,9	G29.04
▼ w = 6,0 mm						
6,0	3,0	**G29.0060.30 S**	AME9	X800 X400	7,5	G29.06
6,0	3,0	**G29.CB60.30 S**	A172	X800 X400	7,5	G29.06

Order example: **G29.0030.15 S X800** (X800 = Grade)

simturn GX
SIMTEK Turning Tools Type GX

Threading, Metr. ISO, External, Partial Profile

Multi-purpose tools, usable for different pitches.

Cutting parameters (start)
Number of passes **8 - 12**
Recom. infeed method
Flank infeed
Vc
Page 31

Suitable toolholders on page
6, 8, 9, 11, 12, 13, 14, 15, 16, 17

Please read add. notes
T01 (Page 28)

SP HM R Legend **29**

Scan **QR-Code** Or Visit **www.simtek.info/cp/524**

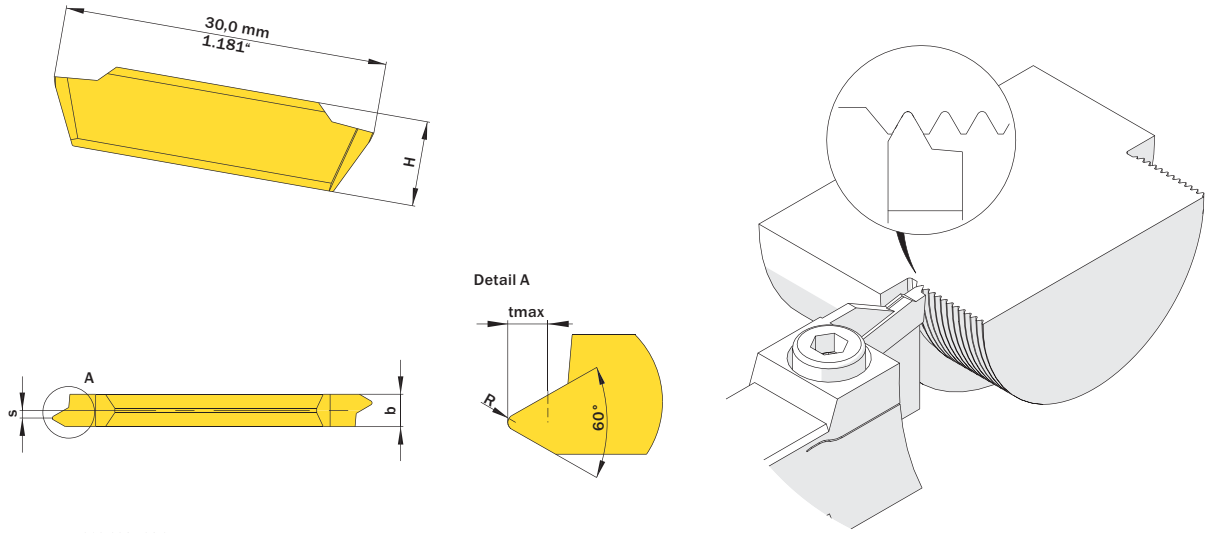

Drawing shows: G29.0915.01 S R

Pitch (as of) mm	Pitch (up to) mm	Part number	Webcode www.simtek.com/webcode	Our first choice P K M N S	b mm	H mm	R mm	tmax mm	S mm	Connectcode www.simtek.com/ccode
1,0	1,25	**G29.0610.01 S R/L**	R AEYM L AGY3	X800 X400	3,3	7,9	0,14	0,81	0,8	G29.03
1,25	1,5	**G29.0712.01 S R/L**	R ACXW L APA9	X800 X400	3,3	7,9	0,18	0,96	0,8	G29.03
1,5	1,75	**G29.0915.01 S R/L**	R AENP L AC4U	X800 X400	3,3	7,9	0,22	1,1	0,7	G29.03
1,75	2,0	**G29.1017.01 S R/L**	R AJJD L AJ13	X800 X400	3,3	7,9	0,25	1,27	0,5	G29.03
2,0	2,5	**G29.1220.01 S R/L**	R AJG0 L AHS1	X800 X400	3,3	7,9	0,29	1,6	0,4	G29.03
2,5	3,0	**G29.1525.01 SR/L**	R AKXA L AJ3J	X800 X400	3,3	7,9	0,36	1,91	0,2	G29.03

Order example: **G29.1220.01 S R X800** (R = Right hand version, X800 = Grade)

Please read the additional notes mentioned in the information area on the top right corner of this page.

Tools for highest expectations
SIMTEK

simturn GX
SIMTEK Turning Tools Type GX

Threading, Metr. ISO, External, Full Profile

For a complete thread profile with correct depth, top radius and bottom radius.

Cutting parameters (start)
Number of passes **8 - 12**
Recom. infeed method **Flank infeed**
Vc **Page 31**

Suitable toolholders on page
6, 8, 9, 11, 12, 13, 14, 15, 16, 17

SP HM R Legend **29**

Scan **QR-Code** Or Visit **www.simtek.info/cp/525**

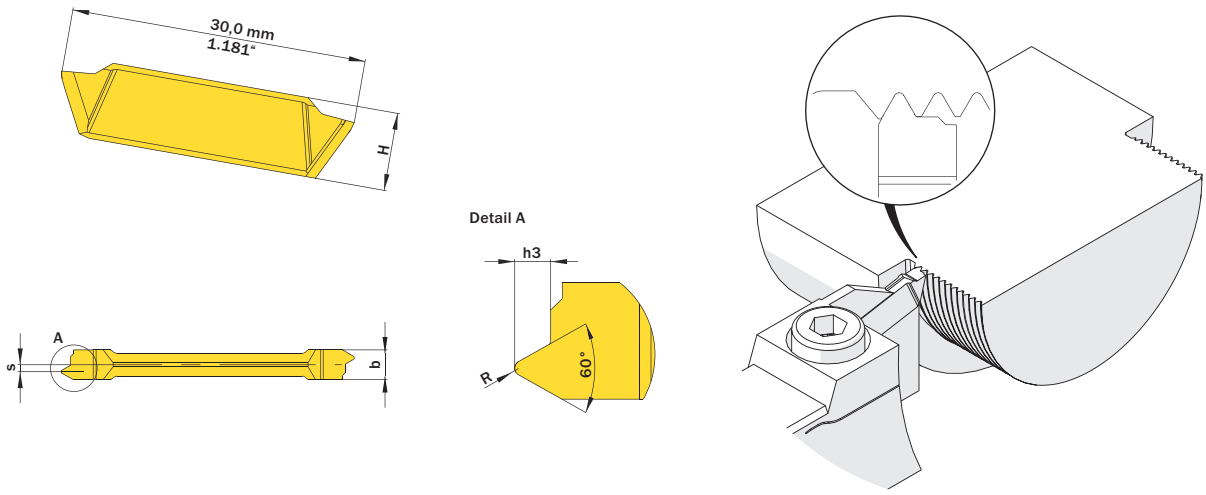

Drawing shows: G29.0915.02 S R

h3	Pitch (as of)	Part number	Webcode www.simtek.com/webcode				Our first choice		b	H	R	S	Connectcode www.simtek.com/ccode
mm	mm						P K M N S		mm	mm	mm	mm	
0,61	1,0	**G29.0610.02 S R/L**	R	AF43	L	ACF7	X800	X400	3,3	7,9	0,12	0,8	G29.03
0,77	1,25	**G29.0712.02 S R/L**	R	AD39	L	AG44	X800	X400	3,3	7,9	0,15	0,8	G29.03
0,92	1,5	**G29.0915.02 S R/L**	R	AEHB	L	ADPK	X800	X400	3,3	7,9	0,2	0,7	G29.03
1,07	1,75	**G29.1017.02 S R/L**	R	AMK1	L	AEZC	X800	X400	3,3	7,9	0,25	0,5	G29.03
1,23	2,0	**G29.1220.02 S R/L**	R	AAGP	L	ANDD	X800	X400	3,3	7,9	0,25	0,5	G29.03
1,53	2,5	**G29.1525.02 S R/L**	R	AJVW	L	AD0G	X800	X400	3,3	7,9	0,35	0,3	G29.03

Order example: **G29.0915.02 S R X800** (R = Right hand version, X800 = Grade)

Tools for highest expectations
SIMTEK

Threading, Whitworth, Full Profile

For a complete thread profile with correct depth, top radius and bottom radius. For internal and external application.

Cutting parameters (start)
Number of passes **8 - 12**
Recom. infeed method **Flank infeed**
Vc **Page 31**

Suitable toolholders on page
6, 8, 9, 12, 13, 15

SP HM Legend **29**

Scan **QR-Code** Or Visit **www.simtek.info/cp/536**

This page contains inch tools! These tools are indicated by **inch** on the right hand side.

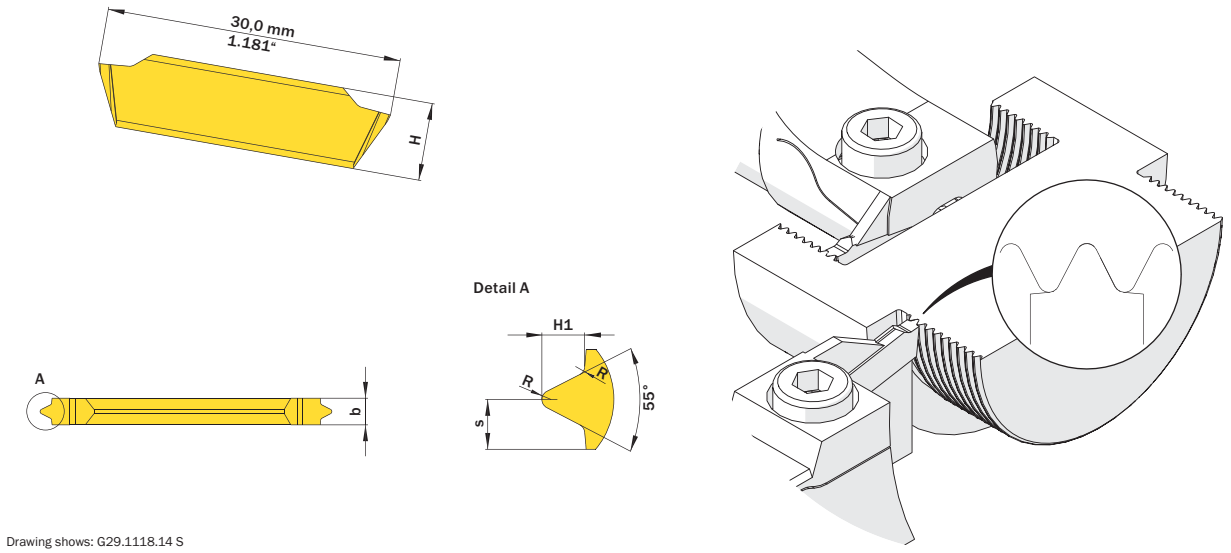

Drawing shows: G29.1118.14 S

H1 mm/inch	Pitch (as of) mm/inch	Threads/Inch	Part number	Webcode www.simtek.com/webcode	Our first choice P K M N S	b mm/inch	H mm/inch	R mm/inch	S mm/inch	Connectcode www.simtek.com/ccode	
0.023"	0.036"	28	**G29.0509.28 S**	AP3C	X800 X400	0.106"	0.311"	0.005"	0.053"	G29.02	inch
0.034"	0.053"	19	**G29.0813.19 S**	APFH	X800 X400	0.106"	0.311"	0.007"	0.053"	G29.02	inch
0.046"	0.071"	14	**G29.1118.14 S**	ACG8	X800 X400	0.106"	0.311"	0.010"	0.053"	G29.02	inch
0.058"	0.091"	11	**G29.1423.11 S**	AEQ7	X800 X400	0.106"	0.311"	0.013"	0.053"	G29.02	inch

Order example: **G29.1118.14 S X800** (X800 = Grade)

Poly-V-Belt Grooves

For Poly-V-profiles K.

Cutting parameters (start)		
f (ext.) **0,12 mm/U**	f (int.) **0,09 mm/U**	Vc **Page 31**

Suitable toolholders on page
6, 8, 9, 11, 12, 13, 14, 15, 16, 17

SP HM Legend **29**

Scan **QR-Code** Or Visit **www.simtek.info/cp/1215**

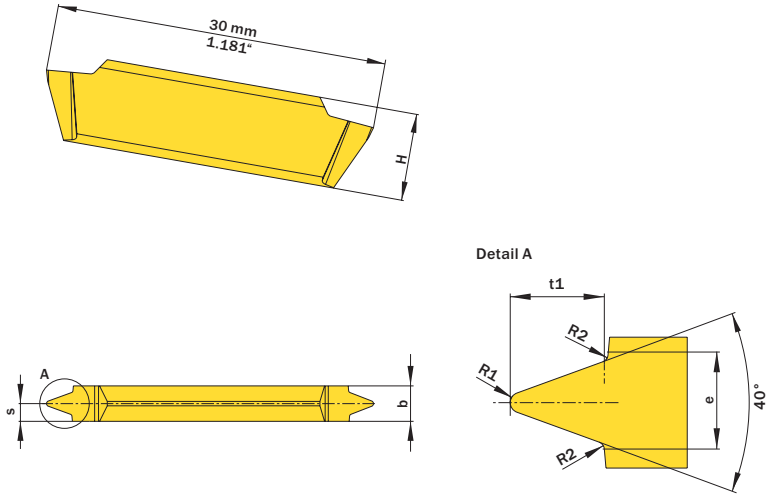

Drawing shows: G29.0223.00 J

e mm	Part number	Webcode www.simtek.com/webcode	Our first choice P K M N S	Profile	b ±0,02 mm	H mm	R1 mm	R2 mm	S mm	t1 mm	Connectcode www.simtek.com/ccode
3,56	**G29.0356.00 J**	AZCH	X800 X400	K	4,0	7,9	0,35	0,25	2,25	3,69	G29.03

Order example: **G29.0356.00 J X800** (X800 = Grade)

Parting Off

Available in different widths and angles. Sintered geometry for improved chip control.

Cutting parameters (start)	
f (ext.) **0,12 mm/U**	Vc **Page 31**

Suitable toolholders on page
6, 7, 8, 9, 10, 11, 12, 13, 14, 15, 16, 17

SP HM R Legend **29**

Scan **QR-Code** Or Visit **www.simtek.info/cp/526**

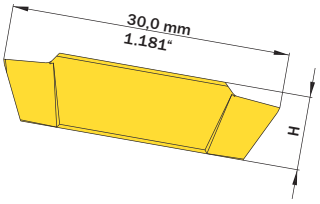

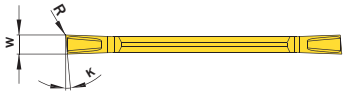

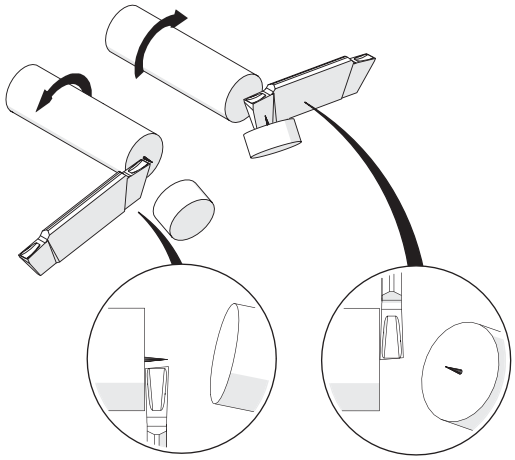

Drawing shows: G29.5200.32 S R

K	w +0,05 mm	Part number	Webcode www.simtek.com/webcode	Our first choice P K M N S	H mm	R mm	Connectcode www.simtek.com/ccode
▼ w = 2,0 mm							
15°	2,0	**G29.1520.32 S R/L**	R AMF7 L ANHX	X800 X400	7,9	0,2	G29.02
5°	2,0	**G29.5200.32 S R/L**	R AMW7 L AGQ9	X800 X400	7,9	0,2	G29.02
8°	2,0	**G29.8200.32 S R/L**	R AAKB L AFZF	X800 X400	7,9	0,2	G29.02
▼ w = 2,5 mm							
5°	2,5	**G29.5250.32 S R/L**	R AATN L AHAD	X800 X400	7,9	0,2	G29.02
▼ w = 3,0 mm							
15°	3,0	**G29.1530.32 S R/L**	R A5CF L AATT	X800 X400	7,9	0,2	G29.03
5°	3,0	**G29.5300.32 S R/L**	R AH07 L ABKE	X800 X400	7,9	0,2	G29.03
8°	3,0	**G29.8300.32 S R/L**	R AA90 L AM09	X800 X400	7,9	0,2	G29.03
▼ w = 4,0 mm							
5°	4,0	**G29.5400.32 S R/L**	R AB5F L AFQH	X800 X400	7,9	0,2	G29.03 | G29.04

Order example: **G29.8200.32 S R X800** (R = Right hand version, X800 = Grade)

Additional information

T01

The simturn threading inserts with partial profile for metric ISO-threads are multi-purpose tools. This means that each insert is offering the possibility to machine different pitches.

The insert is always designed to meet the pitch given as
„Pitch (as of)“: Machining this pitch will result in a standard conform thread form.

The given „Pitch (up to)“ can be machined too with this insert at the expense of standard conformity: The resulting thread will be slightly deeper than the standard. The deeper thread is usually acceptable, but the application and use needs to be evaluated.

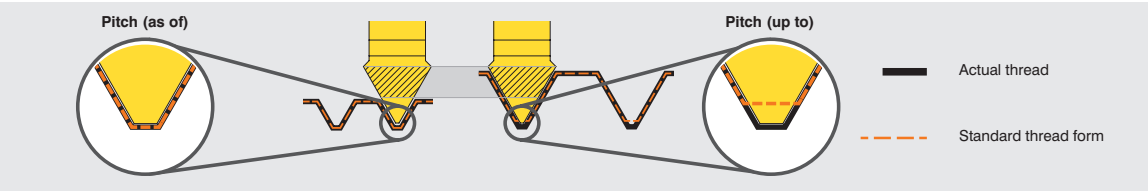

Example

Tools for highest expectations
SIMTEK

Legend

SP CBN **CBN insert**

SP HM **Carbide insert**

TW ST **Steel toolholder**

R **Right hand version shown, left hand version inversely**

Through coolant

Tools for highest expectations
SIMTEK

simturn GX Product list

Part Nr.	P
G10.1.000.06 R	12
G10.1616.02 L	12
G10.1616.02 R	12
G10.1616.03 L	12
G10.1616.03 R	12
G10.1616.04 L	12
G10.1616.04 R	12
G10.2020.02 L	12
G10.2020.02 R	12
G10.2020.03 L	12
G10.2020.03 R	12
G10.2020.04 L	12
G10.2020.04 R	12
G10.2020.06 L	12
G10.2020.06 R	12
G10.2525.02 L	12
G10.2525.02 R	12
G10.2525.03 L	12
G10.2525.03 R	12
G10.2525.04 L	12
G10.2525.04 R	12
G10.2525.06 L	12
G10.2525.06 R	12
G10.3225.03 L	12
G10.3225.03 R	12
G10.3225.04 L	12
G10.3225.04 R	12
G10.3225.06 L	12
G10.3225.06 R	12
G13.0025.03 L	16
G13.0025.03 R	16
G13.0025.04 L	16
G13.0025.04 R	16
G13.0032.03 L	16
G13.0032.03 R	16
G13.0032.04 L	16
G13.0032.04 R	16
G13.0032.06 L	16
G13.0032.06 R	16
G13.0040.03 L	16
G13.0040.03 R	16
G13.0040.04 L	16
G13.0040.04 R	16
G13.0040.06 L	16
G13.0040.06 R	16
G13.0050.03 L	16
G13.0050.03 R	16
G13.0050.04 L	16
G13.0050.04 R	16
G13.0050.06 L	16
G13.0050.06 R	16
G14.0032.02 L	15
G14.0032.02 R	15
G14.0032.03 L	15
G14.0032.03 R	15
G14.0032.04 L	15
G14.0032.04 R	15
G14.0032.06 L	15
G14.0032.06 R	15
G14.0040.03 L	15
G14.0040.03 R	15
G14.0040.04 L	15
G14.0040.04 R	15
G14.0040.06 L	15
G14.0040.06 R	15
G14.0050.03 L	15

Part Nr.	P
G14.0050.03 R	15
G14.0050.04 L	15
G14.0050.04 R	15
G14.0050.06 L	15
G14.0050.06 R	15
G18.0.625.02 L	6
G18.0.625.02 R	6
G18.0.625.03 L	6
G18.0.625.03 R	6
G18.0.625.04 R	7
G18.0.750.02 L	6
G18.0.750.02 R	6
G18.0.750.03 L	6
G18.0.750.03 R	6
G18.0.750.04 L	7
G18.0.750.04 R	7
G18.0.750.06 L	7
G18.0.750.06 R	7
G18.1.000.02 L	6
G18.1.000.02 R	6
G18.1.000.03 L	6
G18.1.000.03 R	6
G18.1.000.04 L	7
G18.1.000.04 R	7
G18.1.000.06 L	7
G18.1.000.06 R	7
G18.1616.02 L	6
G18.1616.02 R	6
G18.1616.03 L	6
G18.1616.03 R	6
G18.2020.02 L	6
G18.2020.02 R	6
G18.2020.03 L	6
G18.2020.03 R	6
G18.2020.04 L	7
G18.2020.04 R	7
G18.2020.06 L	7
G18.2020.06 R	7
G18.2525.02 L	6
G18.2525.02 R	6
G18.2525.03 L	6
G18.2525.03 R	6
G18.2525.04 L	7
G18.2525.04 R	7
G18.2525.06 L	7
G18.2525.06 R	7
G18.3225.03 L	6
G18.3225.03 R	6
G18.3225.04 L	7
G18.3225.04 R	7
G18.3225.06 L	7
G18.3225.06 R	7
G19.2020.03 L	14
G19.2020.03 R	14
G19.2020.04 L	14
G19.2020.04 R	14
G19.2020.06 L	14
G19.2020.06 R	14
G19.2525.03 L	14
G19.2525.03 R	14
G19.2525.04 L	14
G19.2525.04 R	14
G19.2525.06 L	14
G19.2525.06 R	14
G24.1616.03 L	11
G24.1616.03 R	11

Part Nr.	P
G24.1616.04 L	11
G24.1616.04 R	11
G24.2020.03 L	11
G24.2020.03 R	11
G24.2020.04 L	11
G24.2020.04 R	11
G24.2525.03 L	11
G24.2525.03 R	11
G24.2525.04 L	11
G24.2525.04 R	11
G24.3225.03 L	11
G24.3225.03 R	11
G24.3225.04 L	11
G24.3225.04 R	11
G25.2525.04 L	17
G25.2525.04 R	17
G26.1.000.03 L	9
G26.1.000.03 R	9
G26.1.000.04 L	9
G26.1.000.04 R	9
G26.1616.02 L	9
G26.1616.02 R	9
G26.1616.03 L	9
G26.1616.03 R	9
G26.2020.02 L	9
G26.2020.02 R	9
G26.2020.03 L	9
G26.2020.03 R	9
G26.2020.04 L	9
G26.2020.04 R	9
G26.2525.02 L	9
G26.2525.02 R	9
G26.2525.03 L	9
G26.2525.03 R	9
G26.2525.04 L	9
G26.2525.04 R	9
G26.2525.06 L	9
G26.2525.06 R	9
G26.3225.03 L	9
G26.3225.03 R	9
G26.3225.04 L	9
G26.3225.04 R	9
G29.0020.10 S	22
G29.0030.15 S	22
G29.0040.20 S	22
G29.0050.25 S	22
G29.0060.30 S	22
G29.0200.10 S	18
G29.0200.32 S	20
G29.0250.10 S	18
G29.0250.32 S	20
G29.0300.10 S	18
G29.0300.20 S	19
G29.0300.32 S	20
G29.0300.34 S	20
G29.0356.00 J	26
G29.0400.10 S	18
G29.0400.20 S	19
G29.0400.32 S	20
G29.0400.34 S	20
G29.0400.52 S	21
G29.0400.54 S	21
G29.0500.10 S	18
G29.0500.20 S	19
G29.0500.34 S	20
G29.0509.28 S	25

Part Nr.	P
G29.0600.10 S	18
G29.0600.20 S	19
G29.0600.34 S	20
G29.0600.38 S	20
G29.0610.01 S L	23
G29.0610.01 S R	23
G29.0610.02 S L	24
G29.0610.02 S R	24
G29.0712.01 S L	23
G29.0712.01 S R	23
G29.0712.02 S L	24
G29.0712.02 S R	24
G29.0813.19 S	25
G29.0915.01 S L	23
G29.0915.01 S R	23
G29.0915.02 S L	24
G29.0915.02 S R	24
G29.1017.01 S L	23
G29.1017.01 S R	23
G29.1017.02 S L	24
G29.1017.02 S R	24
G29.1118.14 S	25
G29.1220.01 S L	23
G29.1220.01 S R	23
G29.1220.02 S L	24
G29.1220.02 S R	24
G29.1423.11 S	25
G29.1520.32 S L	27
G29.1520.32 S R	27
G29.1525.01 SL	23
G29.1525.01 SR	23
G29.1525.02 S L	24
G29.1525.02 S R	24
G29.1530.32 S L	27
G29.1530.32 S R	27
G29.5200.32 S L	27
G29.5200.32 S R	27
G29.5250.32 S L	27
G29.5250.32 S R	27
G29.5300.32 S L	27
G29.5300.32 S R	27
G29.5400.32 S L	27
G29.5400.32 S R	27
G29.8200.32 S L	27
G29.8200.32 S R	27
G29.8300.32 S L	27
G29.8300.32 S R	27
G29.CB40.20 S	22
G29.CB60.30 S	22
G78.2020.02 L	4
G78.2020.02 R	4
G78.2020.03 L	4
G78.2020.03 R	4
G78.2020.04 L	4
G78.2020.04 R	4
G78.2020.06 L	4
G78.2020.06 R	4
T0A.G10.36.02 L	13
T0A.G10.36.02 R	13
T0A.G10.36.03 L	13
T0A.G10.36.03 R	13
T0A.G10.36.04 L	13
T0A.G10.36.04 R	13
T0A.G10.36.06 L	13
T0A.G10.36.06 R	13
T0A.G10.V1.02 L	8

Part Nr.	P
T0A.G10.V1.02 R	8
T0A.G10.V1.03 L	8
T0A.G10.V1.03 R	8
T0A.G10.V1.06 L	8
T0A.G10.V1.06 R	8
T0A.G18.36.02 L	8
T0A.G18.36.02 R	8
T0A.G18.36.03 L	8
T0A.G18.36.03 R	8
T0A.G18.36.04 L	8
T0A.G18.36.04 R	8
T0A.G18.36.06 L	8
T0A.G18.36.06 R	8
T0A.G18.V1.02 L	3
T0A.G18.V1.02 R	3
T0A.G18.V1.04 L	3
T0A.G18.V1.04 R	3
T0A.G18.V1.06 L	3
T0A.G18.V1.06 R	3
T0A.G25.36.04 L	10
T0A.G25.36.04 R	10

Tools for highest expectations
SIMTEK

Information About The Cutting Parameters

Cutting speed recommendation as of page 32

General information about the cutting parameters recommendations

The given cutting parameters for speed and feed rates are ment as initial start values and are estimated for standard application conditions.
The best parameters depend on a wide variety of machine, workpiece and tool related conditions, for example the general machine condition, and can be above or below the given start values.

Example factors of influence and their effect on the cutting parameters

Reduce values	Increase values
Difficult machine and clamping conditions	Solid machine and clamping conditions
Difficult to machine materials	Easy to machine materials
Long tool reach (L2)	Small tool reach (L2)
No chip form geometry	With chip form geometry

List not complete

Suitability of cutting grades in relation to work piece hardness

Grade	Recommended up to approx.
X8*	HRC52
*T90 / *T91	HRC62
CBN	HRC65 (Depending on application)

Tools for highest expectations
SIMTEK

Cutting Speed Recommendation

ISO-Group	Recommended Cutting Grade	Work piece material	Sub-group	Alternative cutting grade	Vc m/min (Start)
P	X800 X802 X804 X808	Steel, unalloyed	≤ 0,15 % C	X400 / X600	210
			0,15 - 0,4 % C	X400 / X600	190
			≥ 0,4 % C	X400 / X600	180
		Steel, low alloyed (alloying elements ≤ 5%)	Non-hardened	X400 / X600	170
			Hardened	X400 / X600	100
		Steel, high alloyed (Alloying elements > 5%)	Annealed	X400 / X600	110
			Hardened	X400 / X600	90
		Castings	Unalloyed	X400 / X600	150
			Low alloyed (Alloying elements ≤ 5%)	X400 / X600	120
			High alloyed (Alloying elements > 5%)	X400 / X600	90
M	X400 / X600 X402 / X602 X404 / X604 X408 / X608	Stainless Steel Ferritic/Martensitic	Non-hardened	*T41	150
			PH-hardened	*T41	110
			Hardened	*T41	110
		Stainless Steel Austenitic	Austenitic	*T41	140
			PH-hardened	*T41	100
			Super Austenitic	*T41	110
		Stainless Steel Austenitic-ferritic (Duplex)	Non-weldable ≥ 0,05 % C	*T41	120
			Weldable < 0,05 % C	*T41	100
		Stainless Steel (Cast) Ferritic/martensitic	Non-hardened	*T41	130
			PH-hardened	*T41	90
			Hardened	*T41	100
		Stainless Steel (Cast) Austenitic	Austenitic	*T41	130
			PH-gehärtet	*T41	90
		Stainless Steel (Cast) Austenitic-ferritic (Duplex)	Non-weldable ≥ 0,05 % C	*T41	110
			Weldable < 0,05 % C	*T41	90

Tools for highest expectations
SIMTEK

Cutting Speed Recommendation

ISO-Group	Recommended Cutting Grade	Work piece material	Sub-group	Alternative cutting grade	Vc m/min (Start)
K	X800 X802 X804 X808	Malleable	Ferritic (short chipping)	*T57	180
			Pearlitic (long chipping)	*T57	150
		Grey Cast Iron	Low tensile strength	*T57	200
			High tensile strength	*T57	150
		Spheroidal Graphite cast iron	Ferritic	*T57	120
			Pearlitic	*T57	110
			Martensitic	*T57	110
N	X400 / X600 X402 / X602 X404 / X604 X408 / X608	Aluminium alloys, Whrought	Can not be hardened	*F25	590
			Can be hardened, hardened	*F25	530
		Aluminium alloys, Cast	Can not be hardened	*F25	590
			Can be hardened, hardened	*F25	530
		Aluminium alloys, Cast	< 5 % Si	*F25	240
			5 - 12 % Si	*X17	240
			> 12 % Si	PKD[1]	180
		Copper- and Copper Alloys	Free Cutting Alloys, ≥1 % Pb	*F25	290
			Brass, leaded bronzes, ≤ 1 % Pb	*F25	290
			Bronze, lead-free copper incl. electrolytic copper	*F25	210

Tools for highest expectations
SIMTEK

Cutting Speed Recommendation

ISO-Group	Recommended Cutting Grade	Work piece material	Sub-group	Alternative cutting grade	Vc m/min (Start)
S	X400 / X600 X402 / X602 X404 / X604 X408 / X608	Heat-resistant super alloys Fe-based	Annealed or solution treated	*X79	40
			Aged or solution treated and aged	*X79	30
		Heat-resistant super alloys Ni-based	Annealed or solution treated	*X79	40
			Aged or solution treated and aged	*X79	20
			Cast or Cast and aged	*X79	30
		Heat-resistant super alloys Co-based	Annealed or solution treated	*X79	10
			Solution treated and aged	*X79	10
			Cast or Cast and aged	*X79	10
		Titanium Alloys	Commercial pure (99,5 % Ti)	*X79	80
			α, near α and α + β alloys, annealed	*X79	40
			α+β Alloys in aged conditions as well as β alloys. Annealed or aged.	*X79	40
H	CBN[1]	Hardened steel		*T91	50
		Chilled cast iron, cast or cast and aged		*T91	90

1) For best results, a special cutting edge geometry is recommended here.
Please contact our tecnical support +1 862 757 8130 oder usa@simtek.com.

(2) Recommendation depends on the chosen cutting inserts. Please look at the cutting grade recommendations on the catalog page of the cutting insert.

Tools for highest expectations
SIMTEK

General Instructions For Use

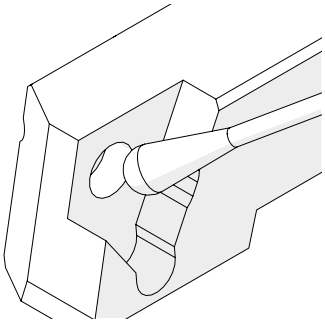

Please clean insert seat well before mounting and use.

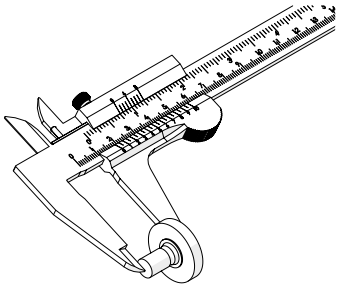

Please control your work pieces frequently.

We recommend the use of tool presetting and measuring devices.

Tools for highest expectations
SIMTEK